COE SEGNALETICA
S.r.l. unipersonale - Via Renata Bianchi 63P (Edificio C2)
16152, Genova Campi - Tel. 010.6591254/Fax 010.8692602
www.coesegnaletica.it - mail: info@coesegnaletica.it
C.F./P.IVA 02400190993 - Cap. Soc. € 24.000 i.v.

Dichiarazione Di Prestazione n. 02 C - 17

CE

RINA SERVICES Spa

14

0474-CPR-0911

EN 12899-1:2007

SEGNALETICA VERTICALE PERMANENTE PER IL TRAFFICO STRADALE

Segnali Stradali Verticali Permanenti completi di Sostegno

1. Codice di identificazione unico del prodotto	Segnale stradale permanente (Codice specifico in fattura)
2. Usi previsti del prodotto	Segnali permanenti per il traffico che forniscono informazioni, avvertimenti e direzioni agli utenti di strade pubbliche e private
3. Nome e indirizzo del fabbricante	COE SEGNALETICA Srl unipersonale Via Renata Bianchi 63P, 16152 - Genova
4. Norma Armonizzata	EN 12899-1:2007
5. Organismo notificato	RINA SERVICES Spa Via Corsica 12, 16128 - Genova Notifica CPR 0911 rilasciato certificato di conformità del controllo della produzione in fabbrica (0474-CPR-0911) fondato sui seguenti elementi: a) determinazione del prodotto-tipo in base a prove di tipo b) ispezione iniziale dello stabilimento di produzione e del controllo della produzione in fabbrica c) sorveglianza, valutazione e verifica continue del controllo della produzione in fabbrica
6. Sistema di valutazione e verifica della costanza della prestazione del prodotto da costruzione di cui all'allegato V	SISTEMA 1
6. Prestazione dichiarata	Vedi tabelle seguenti

PRESTAZIONI DICHIARATE SECONDO EN 12899-1:2007 - SEGNALE STRADALE VERTICALE PERMANENTE CON SOSTEGNO
(pannello di sostegno con applicato il materiale costituente la faccia a vista e il palo per fissarlo)

CARATTERISTICHE DEI PANNELLI
(struttura che comprende il supporto, gli elementi di rinforzo ed i fissaggi)

16/10/2017
Andrea Cavassa

CARATTERISTICHE DELLA FACCIA A VISTA
(materiale o materiali applicati al supporto per ottenere la superfice finita del segnale)

CARATTERISTICHE DEI SOSTEGNI
(struttura tubolare che permette il posizionamento del segnale stradale verticale permanente)

La prestazione del prodotto di cui ai punti 1 e 2 è conforme alla presente prestazione dichiarata.
Si rilascia la presente dichiarazione di prestazione sotto la responsabilità esclusiva del fabbricante di cui al punto 4.

CARATTERISTICHE TECNICHE PANNELLO IN FERRO EN 12899-1:2007

TIPOLOGIA / TYPOLOGY	DIMENSIONI (cm) / DIMENSIONS (cm)	MATERIALE / MATERIAL	SPESSORE (mm) / THICKNESS (mm)	SISTEMA AGGANCIO / FIXING SYSTEM: N. STRINGHE / NO. CLAMPS	SISTEMA AGGANCIO / FIXING SYSTEM: N. TIRANTI DI RINFORZO / NO. NORMAL SLIDER REINFORCEMENTS	SISTEMA AGGANCIO / FIXING SYSTEM: N. RINFORZI CORSORE TRAVERSE / NO. ROD SLIDER REINFORCEMENTS	SISTEMA AGGANCIO / FIXING SYSTEM: INTERASSE MAX DI CALCOLO ATTACCHI / MAXIMUM DISTANCE CALCULATION CLAMPS	RESISTENZA AI CARICHI ORIZZONTALI / RESISTANCE TO HORIZONTAL LOADS: AZIONE DEL VENTO / WIND ACTION	RESISTENZA AI CARICHI ORIZZONTALI / RESISTANCE TO HORIZONTAL LOADS: DEFORMAZIONE TEMPORANEA PLENTI BITE / TEMPORARY DEFLECTION BENDING	RESISTENZA AI CARICHI ORIZZONTALI / RESISTANCE TO HORIZONTAL LOADS: CARICO DINAMICO DA PERCUSSIONE DI NEVE / DYNAMIC SNOW LOAD	RESISTENZA AI CARICHI ORIZZONTALI / RESISTANCE TO HORIZONTAL LOADS: CARICHI CONCENTRATI / POINTS LOADS	RESISTENZA AI CARICHI ORIZZONTALI / RESISTANCE TO HORIZONTAL LOADS: DEFORMAZIONE PERMANENTE / PERMANENT DEFLECTION	RESISTENZA AI CARICHI ORIZZONTALI / RESISTANCE TO HORIZONTAL LOADS: PIEGATURE / FORMS
TRIANGOLO / TRIANGLE	64	FERRO / STEEL	1	2			33	WL7	TDB2	DSL0	PL0	PASSA / PASS	PASSA / PASS
TRIANGOLO / TRIANGLE	60	FERRO / STEEL	1		2		32	WL7	TDB2	DSL0	PL0	PASSA / PASS	PASSA / PASS
TRIANGOLO / TRIANGLE	90	FERRO / STEEL	1	2			44	WL4	TDB3	DSL0	PL0	PASSA / PASS	PASSA / PASS
TRIANGOLO / TRIANGLE	90	FERRO / STEEL	1		2		44	WL7	TDB3	DSL0	PL0	PASSA / PASS	PASSA / PASS
TRIANGOLO / TRIANGLE	120	FERRO / STEEL	1	3			29	WL1	TDB2	DSL0	PL0	PASSA / PASS	PASSA / PASS
TRIANGOLO / TRIANGLE	120	FERRO / STEEL	1		3		29	WL7	TDB1	DSL0	PL0	PASSA / PASS	PASSA / PASS
TRIANGOLO / TRIANGLE	130	FERRO / STEEL	1		2		58	WL2	TDB2	DSL0	PL0	PASSA / PASS	PASSA / PASS
DISCO / CIRCLE	40	FERRO / STEEL	1	2			27	WL7	TDB4	DSL0	PL0	PASSA / PASS	PASSA / PASS
DISCO / CIRCLE	50	FERRO / STEEL	1	1+BUSSOLA 1+BUSH			-	WL1	TDB3	DSL0	PL0	PASSA / PASS	PASSA / PASS
DISCO / CIRCLE	60	FERRO / STEEL	1	2			44	WL7	TDB4	DSL0	PL0	PASSA / PASS	PASSA / PASS
DISCO / CIRCLE	60	FERRO / STEEL	1	8			44	WL7	TDB4	DSL0	PL0	PASSA / PASS	PASSA / PASS
DISCO / CIRCLE	60	FERRO / STEEL	1		2		44	WL7	TDB4	DSL0	PL0	PASSA / PASS	PASSA / PASS
DISCO / CIRCLE	90	FERRO / STEEL	1		1+BUSSOLA 1+BUSH		-	WL1	TDB4	DSL0	PL0	PASSA / PASS	PASSA / PASS
DISCO / CIRCLE	90	FERRO / STEEL	1	3			29	WL1	TDB4	DSL0	PL0	PASSA / PASS	PASSA / PASS
DISCO / CIRCLE	90	FERRO / STEEL	1		3		29	WL7	TDB4	DSL0	PL0	PASSA / PASS	PASSA / PASS
DISCO / CIRCLE	90	FERRO / STEEL	1		2		42	WL7	TDB4	DSL0	PL0	PASSA / PASS	PASSA / PASS
OTTAGONO / OCTAGON	50	FERRO / STEEL	1	2			44	WL7	TDB4	DSL0	PL0	PASSA / PASS	PASSA / PASS
OTTAGONO / OCTAGON	50	FERRO / STEEL	1		2		44	WL7	TDB4	DSL0	PL0	PASSA / PASS	PASSA / PASS
OTTAGONO / OCTAGON	90	FERRO / STEEL	1		2		43	WL7	TDB4	DSL0	PL0	PASSA / PASS	PASSA / PASS
OTTAGONO / OCTAGON	120	FERRO / STEEL	1		3		40	WL7	TDB4	DSL0	PL0	PASSA / PASS	PASSA / PASS
FRECCIA / ARROW	150X30	FERRO / STEEL	1		2		≤ 27	WL7	TDB1	DSL0	PL0	PASSA / PASS	PASSA / PASS
FRECCIA / ARROW	150X60	FERRO / STEEL	1		2		≤ 27	WL7	TDB1	DSL0	PL0	PASSA / PASS	PASSA / PASS
FRECCIA / ARROW	170X50	FERRO / STEEL	1		3		≤ 23	WL7	TDB1	DSL0	PL0	PASSA / PASS	PASSA / PASS
FRECCIA / ARROW	200X50	FERRO / STEEL	1		3		≤ 23	WL7	TDB1	DSL0	PL0	PASSA / PASS	PASSA / PASS
FRECCIA / ARROW	250X70	FERRO / STEEL	1		3		≤ 23	WL7	TDB1	DSL0	PL0	PASSA / PASS	PASSA / PASS
FRECCIA / ARROW	300X70	FERRO / STEEL	1		3		≤ 23	WL7	TDB2	DSL0	PL0	PASSA / PASS	PASSA / PASS
FRECCIA / ARROW	350X70	FERRO / STEEL	1		3		≤ 41	WL7	TDB2	DSL0	PL0	PASSA / PASS	PASSA / PASS
FRECCIA IN 2 PEZZI / ARROW IN 2 PIECES	400X70	FERRO / STEEL	1		3		≤ 41	WL7	TDB2	DSL0	PL0	PASSA / PASS	PASSA / PASS
FRECCIA / ARROW	300X100	FERRO / STEEL	1		3		≤ 41	WL7	TDB2	DSL0	PL0	PASSA / PASS	PASSA / PASS
FRECCIA / ARROW	350X100	FERRO / STEEL	1		3		< 41	WL7	TDB2	DSL0	PL0	PASSA / PASS	PASSA / PASS
FRECCIA IN 2 PEZZI / ARROW IN 2 PIECES	400X100	FERRO / STEEL	1		3		≤ 41	WL7	TDB2	DSL0	PL0	PASSA / PASS	PASSA / PASS
TARGA / RECTANGLE	25X10	FERRO / STEEL	1	1			-	WL7	TDB3	DSL0	PL0	PASSA / PASS	PASSA / PASS
TARGA / RECTANGLE	35X15	FERRO / STEEL	1	1			-	WL7	TDB3	DSL0	PL0	PASSA / PASS	PASSA / PASS
TARGA / RECTANGLE	53X17	FERRO / STEEL	1	1			-	WL7	TDB3	DSL0	PL0	PASSA / PASS	PASSA / PASS
TARGA / RECTANGLE	53X18	FERRO / STEEL	1	1			-	WL7	TDB4	DSL0	PL0	PASSA / PASS	PASSA / PASS
TARGA / RECTANGLE	20X20	FERRO / STEEL	1	1			-	WL7	TDB3	DSL0	PL0	PASSA / PASS	PASSA / PASS
TARGA / RECTANGLE	30X20	FERRO / STEEL	1	1			-	WL7	TDB3	DSL0	PL0	PASSA / PASS	PASSA / PASS
TARGA / RECTANGLE	40X20	FERRO / STEEL	1	1			-	WL7	TDB3	DSL0	PL0	PASSA / PASS	PASSA / PASS
TARGA / RECTANGLE	60X20	FERRO / STEEL	1	2			≤ 18	WL7	TDB3	DSL0	PL0	PASSA / PASS	PASSA / PASS
TARGA / RECTANGLE	60X20	FERRO / STEEL	1		1		-	WL7	TDB3	DSL0	PL0	PASSA / PASS	PASSA / PASS
TARGA DOPPIA BASE / DOUBLE BASE RECTANGLE	60X20	FERRO / STEEL	1	2+2			≤ 16	WL4	TDB2	DSL0	PL0	PASSA / PASS	PASSA / PASS
TARGA / RECTANGLE	100X20	FERRO / STEEL	1	2+2			-	WL7	TDB3	DSL0	PL0	PASSA / PASS	PASSA / PASS
TARGA / RECTANGLE	100X20	FERRO / STEEL	1	2+2			≤ 18	WL3	TDB2	DSL0	PL0	PASSA / PASS	PASSA / PASS
TARGA / RECTANGLE	100X20	FERRO / STEEL	1		1		-	WL7	TDB1	DSL0	PL0	PASSA / PASS	PASSA / PASS
TARGA / RECTANGLE	15X25	FERRO / STEEL	1	1			-	WL7	TDB3	DSL0	PL0	PASSA / PASS	PASSA / PASS
TARGA / RECTANGLE	25X25	FERRO / STEEL	1	1			-	WL7	TDB3	DSL0	PL0	PASSA / PASS	PASSA / PASS
TARGA / RECTANGLE	50X25	FERRO / STEEL	1	2			≤ 44	WL7	TDB4	DSL0	PL0	PASSA / PASS	PASSA / PASS
TARGA DOPPIA BASE / DOUBLE BASE RECTANGLE	50X25	FERRO / STEEL	1	2+2			≤ 44	WL7	TDB4	DSL0	PL0	PASSA / PASS	PASSA / PASS
TARGA / RECTANGLE	80X25	FERRO / STEEL	1	2			≤ 16	WL4	TDB2	DSL0	PL0	PASSA / PASS	PASSA / PASS
TARGA / RECTANGLE	80X25	FERRO / STEEL	1		2		≤ 48	WL7	TDB4	DSL0	PL0	PASSA / PASS	PASSA / PASS
TARGA / RECTANGLE	100X25	FERRO / STEEL	1	2+2			-	WL7	TDB3	DSL0	PL0	PASSA / PASS	PASSA / PASS
TARGA / RECTANGLE	100X25	FERRO / STEEL	1	2+2			≤ 18	WL3	TDB2	DSL0	PL0	PASSA / PASS	PASSA / PASS
TARGA / RECTANGLE	100X25	FERRO / STEEL	1		2		≤ 50	WL7	TDB2	DSL0	PL0	PASSA / PASS	PASSA / PASS
TARGA / RECTANGLE	125X25	FERRO / STEEL	1	2+2			-	WL7	TDB3	DSL0	PL0	PASSA / PASS	PASSA / PASS
TARGA / RECTANGLE	125X25	FERRO / STEEL	1	2+2			≤ 18	WL3	TDB2	DSL0	PL0	PASSA / PASS	PASSA / PASS
TARGA / RECTANGLE	125X25	FERRO / STEEL	1		2		≤ 50	WL7	TDB2	DSL0	PL0	PASSA / PASS	PASSA / PASS
TARGA / RECTANGLE	150X25	FERRO / STEEL	1		2		≤ 50	WL7	TDB2	DSL0	PL0	PASSA / PASS	PASSA / PASS
TARGA / RECTANGLE	180X25	FERRO / STEEL	1		2		≤ 50	WL7	TDB2	DSL0	PL0	PASSA / PASS	PASSA / PASS
TARGA / RECTANGLE	200X25	FERRO / STEEL	1		2		≤ 50	WL7	TDB2	DSL0	PL0	PASSA / PASS	PASSA / PASS
TARGA / RECTANGLE	80X27	FERRO / STEEL	1	2			≤ 16	WL4	TDB2	DSL0	PL0	PASSA / PASS	PASSA / PASS
TARGA / RECTANGLE	80X27	FERRO / STEEL	1		2		≤ 48	WL7	TDB4	DSL0	PL0	PASSA / PASS	PASSA / PASS
TARGA / RECTANGLE	20X30	FERRO / STEEL	1	1			-	WL7	TDB3	DSL0	PL0	PASSA / PASS	PASSA / PASS
TARGA / RECTANGLE	40X30	FERRO / STEEL	1	2			< 44	WL7	TDB4	DSL0	PL0	PASSA / PASS	PASSA / PASS

TIPOLOGIA / TYPOLOGY	DIMENSIONI (DM) / DIMENSIONS (DM)	MATERIALE / MATERIAL	SPESSORE (MM) / THICKNESS (MM)	SISTEMA AGGANCIO / FIXING SYSTEM: N. ATTACCHI / NO. CLAMPS	N. RINFORZI CORSOIO NORMALE / N.° NORMAL SLIDER REINFORCEMENTS	N. RINFORZI CORSOIO TRAVERSE / NO. TRAV SLIDER REINFORCEMENTS	INTERASSE MAX DI CALCOLO ATTACCHI / MAXIMUM DISTANCE CALCULATION CLAMPS	RESISTENZA AI CARICHI ORIZZONTALI *) / RESISTANCE TO HORIZONTAL LOADS: AZIONE DEL VENTO / WIND ACTION	DEFORMAZIONE TEMPORANEA FLETTENTE / TEMPORARY DEFLECTION BENDING	CARICO DINAMICO DA RIMOZIONE DI NEVE / DYNAMIC SNOW LOAD	CARICHI CONCENTRATI / POINT LOADS	DEFORMAZIONE PERMANENTE / PERMANENT DEFLECTION	PIGNONI / FOINGS
TARGA DOPPIA BASE / DOUBLE BASE RECTANGLE	40X30	FERRO / STEEL	1	2+2			≤ 44	WL7	TDB4	DSL0	PL0	PASSA / PASS	PASSA / PASS
TARGA / RECTANGLE	60X30	FERRO / STEEL	1	2			≤ 44	WL7	TDB4	DSL0	PL0	PASSA / PASS	PASSA / PASS
TARGA DOPPIA BASE / DOUBLE BASE RECTANGLE	60X30	FERRO / STEEL	1	2+2			≤ 44	WL7	TDB4	DSL0	PL0	PASSA / PASS	PASSA / PASS
TARGA / RECTANGLE	80X30	FERRO / STEEL	1	2			≤ 44	WL7	TDB4	DSL0	PL0	PASSA / PASS	PASSA / PASS
TARGA / RECTANGLE	80X30	FERRO / STEEL	1		2		≤ 44	WL7	TDB4	DSL0	PL0	PASSA / PASS	PASSA / PASS
TARGA / RECTANGLE	90X30	FERRO / STEEL	1		1		-	WL7	TDB1	DSL0	PL0	PASSA / PASS	PASSA / PASS
TARGA / RECTANGLE	90X30	FERRO / STEEL	1		2		-	WL7	TDB1	DSL0	PL0	PASSA / PASS	PASSA / PASS
TARGA / RECTANGLE	100X30	FERRO / STEEL	1		2		≤ 50	WL7	TDB2	DSL0	PL0	PASSA / PASS	PASSA / PASS
TARGA / RECTANGLE	120X30	FERRO / STEEL	1		2		≤ 50	WL7	TDB2	DSL0	PL0	PASSA / PASS	PASSA / PASS
TARGA / RECTANGLE	140X30	FERRO / STEEL	1		2		≤ 50	WL7	TDB2	DSL0	PL0	PASSA / PASS	PASSA / PASS
TARGA / RECTANGLE	160X30	FERRO / STEEL	1		2		≤ 50	WL7	TDB2	DSL0	PL0	PASSA / PASS	PASSA / PASS
TARGA / RECTANGLE	180X30	FERRO / STEEL	1		2		≤ 50	WL7	TDB2	DSL0	PL0	PASSA / PASS	PASSA / PASS
TARGA / RECTANGLE	200X30	FERRO / STEEL	1		2		≤ 50	WL7	TDB2	DSL0	PL0	PASSA / PASS	PASSA / PASS
TARGA / RECTANGLE	70X35	FERRO / STEEL	1		2		≤ 48	WL7	TDB4	DSL0	PL0	PASSA / PASS	PASSA / PASS
TARGA / RECTANGLE	15X35	FERRO / STEEL	1	1			-	WL7	TDB3	DSL0	PL0	PASSA / PASS	PASSA / PASS
TARGA / RECTANGLE	105X35	FERRO / STEEL	1		2		≤ 50	WL7	TDB2	DSL0	PL0	PASSA / PASS	PASSA / PASS
TARGA / RECTANGLE	125X35	FERRO / STEEL	1		2		≤ 50	WL7	TDB2	DSL0	PL0	PASSA / PASS	PASSA / PASS
ROMBO / DIAMOND	40	FERRO / STEEL	1	2			≤ 44	WL7	TDB4	DSL0	PL0	PASSA / PASS	PASSA / PASS
TARGA / RECTANGLE	40X40	FERRO / STEEL	1	2			≤ 44	WL7	TDB4	DSL0	PL0	PASSA / PASS	PASSA / PASS
TARGA DOPPIA BASE / DOUBLE BASE RECTANGLE	50X40	FERRO / STEEL	1	2+2			≤ 44	WL7	TDB4	DSL0	PL0	PASSA / PASS	PASSA / PASS
TARGA / RECTANGLE	60X40	FERRO / STEEL	1	2			≤ 44	WL7	TDB4	DSL0	PL0	PASSA / PASS	PASSA / PASS
TARGA DOPPIA BASE / DOUBLE BASE RECTANGLE	60X40	FERRO / STEEL	1	2+2			≤ 44	WL7	TDB4	DSL0	PL0	PASSA / PASS	PASSA / PASS
TARGA / RECTANGLE	80X40	FERRO / STEEL	1		2		≤ 44	WL7	TDB4	DSL0	PL0	PASSA / PASS	PASSA / PASS
TARGA / RECTANGLE	100X40	FERRO / STEEL	1		2		≤ 50	WL7	TDB2	DSL0	PL0	PASSA / PASS	PASSA / PASS
TARGA / RECTANGLE	120X40	FERRO / STEEL	1		2		≤ 50	WL7	TDB2	DSL0	PL0	PASSA / PASS	PASSA / PASS
TARGA / RECTANGLE	130X40	FERRO / STEEL	1		2		≤ 50	WL7	TDB2	DSL0	PL0	PASSA / PASS	PASSA / PASS
TARGA / RECTANGLE	135X40	FERRO / STEEL	1		2		≤ 50	WL7	TDB2	DSL0	PL0	PASSA / PASS	PASSA / PASS
TARGA / RECTANGLE	150X40	FERRO / STEEL	1		2		≤ 50	WL7	TDB2	DSL0	PL0	PASSA / PASS	PASSA / PASS
TARGA / RECTANGLE	160X40	FERRO / STEEL	1		2		≤ 50	WL7	TDB2	DSL0	PL0	PASSA / PASS	PASSA / PASS
TARGA / RECTANGLE	180X40	FERRO / STEEL	1		2		≤ 50	WL7	TDB2	DSL0	PL0	PASSA / PASS	PASSA / PASS
TARGA / RECTANGLE	200X40	FERRO / STEEL	1		2		≤ 50	WL7	TDB2	DSL0	PL0	PASSA / PASS	PASSA / PASS
TARGA / RECTANGLE	250X40	FERRO / STEEL	1		2		≤ 50	WL7	TDB2	DSL0	PL0	PASSA / PASS	PASSA / PASS
TARGA / RECTANGLE	300X40	FERRO / STEEL	1		2		≤ 50	WL7	TDB2	DSL0	PL0	PASSA / PASS	PASSA / PASS
TARGA / RECTANGLE	25X45	FERRO / STEEL	1	2			≤ 44	WL7	TDB4	DSL0	PL0	PASSA / PASS	PASSA / PASS
TARGA / RECTANGLE	135X45	FERRO / STEEL	1		2		≤ 50	WL7	TDB2	DSL0	PL0	PASSA / PASS	PASSA / PASS
TARGA / RECTANGLE	25X50	FERRO / STEEL	1	2			≤ 44	WL7	TDB4	DSL0	PL0	PASSA / PASS	PASSA / PASS
TARGA / RECTANGLE	50X50	FERRO / STEEL	1	2			≤ 44	WL7	TDB4	DSL0	PL0	PASSA / PASS	PASSA / PASS
TARGA DOPPIA BASE / DOUBLE BASE RECTANGLE	70X50	FERRO / STEEL	1	2	2		≤ 48	WL7	TDB4	DSL0	PL0	PASSA / PASS	PASSA / PASS
TARGA / RECTANGLE	100X50	FERRO / STEEL	1		2		≤ 50	WL7	TDB2	DSL0	PL0	PASSA / PASS	PASSA / PASS
TARGA / RECTANGLE	120X50	FERRO / STEEL	1		2		≤ 50	WL7	TDB2	DSL0	PL0	PASSA / PASS	PASSA / PASS
TARGA / RECTANGLE	125X50	FERRO / STEEL	1		2		≤ 50	WL7	TDB2	DSL0	PL0	PASSA / PASS	PASSA / PASS
TARGA / RECTANGLE	130X50	FERRO / STEEL	1		2		≤ 50	WL7	TDB2	DSL0	PL0	PASSA / PASS	PASSA / PASS
TARGA / RECTANGLE	150X50	FERRO / STEEL	1		2		≤ 50	WL7	TDB2	DSL0	PL0	PASSA / PASS	PASSA / PASS
TARGA / RECTANGLE	160X50	FERRO / STEEL	1		2		≤ 50	WL7	TDB2	DSL0	PL0	PASSA / PASS	PASSA / PASS
TARGA / RECTANGLE	180X50	FERRO / STEEL	1		2		≤ 50	WL7	TDB2	DSL0	PL0	PASSA / PASS	PASSA / PASS
TARGA / RECTANGLE	200X50	FERRO / STEEL	1		2		≤ 50	WL7	TDB2	DSL0	PL0	PASSA / PASS	PASSA / PASS
TARGA / RECTANGLE	250X50	FERRO / STEEL	1		2		≤ 50	WL7	TDB2	DSL0	PL0	PASSA / PASS	PASSA / PASS
TARGA / RECTANGLE	300X50	FERRO / STEEL	1		2		≤ 50	WL7	TDB4	DSL0	PL0	PASSA / PASS	PASSA / PASS
TARGA / RECTANGLE	60X60	FERRO / STEEL	1	2			≤ 44	WL7	TDB4	DSL0	PL0	PASSA / PASS	PASSA / PASS
TARGA DOPPIA BASE / DOUBLE BASE RECTANGLE	40X60	FERRO / STEEL	1	2+2			≤ 44	WL7	TDB4	DSL0	PL0	PASSA / PASS	PASSA / PASS
TARGA / RECTANGLE	40X60	FERRO / STEEL	1	2			≤ 44	WL7	TDB4	DSL0	PL0	PASSA / PASS	PASSA / PASS
TARGA / RECTANGLE	40X60	FERRO / STEEL	1	2			≤ 44	WL7	TDB4	DSL0	PL0	PASSA / PASS	PASSA / PASS
ROMBO / DIAMOND	60	FERRO / STEEL	1		3		≤ 35	WL7	TDB2	DSL0	PL0	PASSA / PASS	PASSA / PASS
TARGA / RECTANGLE	60X60	FERRO / STEEL	1	2			≤ 44	WL7	TDB4	DSL0	PL0	PASSA / PASS	PASSA / PASS
TARGA / RECTANGLE	60X60	FERRO / STEEL	1		2		≤ 44	WL7	TDB4	DSL0	PL0	PASSA / PASS	PASSA / PASS
TARGA DOPPIA BASE / DOUBLE BASE RECTANGLE	80X60	FERRO / STEEL	1	2+2			≤ 44	WL1	TDB3	DSL0	PL0	PASSA / PASS	PASSA / PASS
TARGA (BASE 80) / RECTANGLE (BASE 90)	90X60	FERRO / STEEL	1	3	2		≤ 50	WL7	TDB2	DSL0	PL0	PASSA / PASS	PASSA / PASS
TARGA (BASE 50) / RECTANGLE (BASE 60)	90X60	FERRO / STEEL	1	3	2		≤ 37	WL6	TDB3	DSL0	PL0	PASSA / PASS	PASSA / PASS
TARGA / RECTANGLE	90X60	FERRO / STEEL	1		2		≤ 50	WL7	TDB2	DSL0	PL0	PASSA / PASS	PASSA / PASS
TARGA / RECTANGLE	100X60	FERRO / STEEL	1		2		≤ 50	WL7	TDB2	DSL0	PL0	PASSA / PASS	PASSA / PASS
TARGA / RECTANGLE	120X60	FERRO / STEEL	1		2		≤ 50	WL7	TDB2	DSL0	PL0	PASSA / PASS	PASSA / PASS
TARGA / RECTANGLE	130X60	FERRO / STEEL	1		2		≤ 50	WL7	TDB2	DSL0	PL0	PASSA / PASS	PASSA / PASS
TARGA / RECTANGLE	150X60	FERRO / STEEL	1		2		≤ 50	WL7	TDB2	DSL0	PL0	PASSA / PASS	PASSA / PASS

TIPOLOGIA / TYPOLOGY	DIMENSIONI (CM) / DIMENSIONS (CM)	MATERIALE / MATERIAL	SPESSORE (MM) / THICKNESS (MM)	SISTEMA MECCANICO / FIXING SYSTEM					RESISTENZA AI CARICHI ORIZZONTALI / RESISTANCE TO HORIZONTAL LOADS					
				N. ATTACCHI / NO. CLAMPS	N. RINFORZI CORSOIO NORMALE / NO. NORMAL SLIDER REINFORCEMENTS	N. RINFORZI CORSOIO TRAVERSE / NO. RODS SLIDER REINFORCEMENTS	INTERASSE MAX DI CALCOLO ATTACCHI / MAXIMUM DISTANCE CALCULATION CLAMPS	AZIONE DEL VENTO / WIND ACTION	DEFORMAZIONE TEMPORANEA FLETTENTE / TEMPORARY DEFLECTION BENDING	CARICO DINAMICO DA NEVICATA DI NEVE / DYNAMIC SNOW LOAD	CARICHI CONCENTRATI / POINTS LOADS	DEFORMAZIONE PERMANENTE / PERMANENT DEFLECTION	FRAGILITÀ / FRAGILE
TARGA / RECTANGLE	180X60	FERRO / STEEL	1		2		≤ 50	WL7	TDB2	DSL0	PL0	PASSA / PASS	PASSA / PASS
TARGA / RECTANGLE	200X60	FERRO / STEEL	1		2		≤ 50	WL7	TDB2	DSL0	PL0	PASSA / PASS	PASSA / PASS
TARGA / RECTANGLE	240X60	FERRO / STEEL	1		2		≤ 50	WL7	TDB2	DSL0	PL0	PASSA / PASS	PASSA / PASS
TARGA / RECTANGLE	70X70	FERRO / STEEL	1		2		≤ 48	WL7	TDB4	DSL0	PL0	PASSA / PASS	PASSA / PASS
TARGA / RECTANGLE	100X70	FERRO / STEEL	1		2		≤ 50	WL7	TDB2	DSL0	PL0	PASSA / PASS	PASSA / PASS
TARGA / RECTANGLE	120X70	FERRO / STEEL	1		2		≤ 50	WL7	TDB2	DSL0	PL0	PASSA / PASS	PASSA / PASS
TARGA / RECTANGLE	130X70	FERRO / STEEL	1		2		≤ 50	WL7	TDB2	DSL0	PL0	PASSA / PASS	PASSA / PASS
TARGA / RECTANGLE	150X70	FERRO / STEEL	1		2		≤ 50	WL7	TDB2	DSL0	PL0	PASSA / PASS	PASSA / PASS
TARGA / RECTANGLE	170X70	FERRO / STEEL	1		2		≤ 50	WL7	TDB2	DSL0	PL0	PASSA / PASS	PASSA / PASS
TARGA / RECTANGLE	180X70	FERRO / STEEL	1		2		≤ 50	WL7	TDB2	DSL0	PL0	PASSA / PASS	PASSA / PASS
TARGA / RECTANGLE	200X70	FERRO / STEEL	1		2		≤ 50	WL7	TDB2	DSL0	PL0	PASSA / PASS	PASSA / PASS
TARGA / RECTANGLE	230X70	FERRO / STEEL	1		2		≤ 50	WL7	TDB2	DSL0	PL0	PASSA / PASS	PASSA / PASS
TARGA / RECTANGLE	250X70	FERRO / STEEL	1		2		≤ 50	WL7	TDB2	DSL0	PL0	PASSA / PASS	PASSA / PASS
TARGA / RECTANGLE	300X70	FERRO / STEEL	1		2		≤ 50	WL7	TDB2	DSL0	PL0	PASSA / PASS	PASSA / PASS
TARGA / RECTANGLE	38X75	FERRO / STEEL	1	2			≤ 60	WL7	TDB3	DSL0	PL0	PASSA / PASS	PASSA / PASS
TARGA / RECTANGLE	54X75	FERRO / STEEL	1	3			≤ 37	WL6	TDB3	DSL0	PL0	PASSA / PASS	PASSA / PASS
TARGA / RECTANGLE	100X75	FERRO / STEEL	1		2		≤ 50	WL7	TDB2	DSL0	PL0	PASSA / PASS	PASSA / PASS
TARGA / RECTANGLE	105X75	FERRO / STEEL	1		2		≤ 50	WL7	TDB2	DSL0	PL0	PASSA / PASS	PASSA / PASS
TARGA / RECTANGLE	125X75	FERRO / STEEL	1		2		≤ 50	WL7	TDB2	DSL0	PL0	PASSA / PASS	PASSA / PASS
TARGA / RECTANGLE	200X80	FERRO / STEEL	1	2			≤ 60	WL7	TDB3	DSL0	PL0	PASSA / PASS	PASSA / PASS
TARGA / RECTANGLE	270X80	FERRO / STEEL	1	2			≤ 60	WL7	TDB3	DSL0	PL0	PASSA / PASS	PASSA / PASS
TARGA / RECTANGLE	80X80	FERRO / STEEL	1		2		≤ 48	WL7	TDB4	DSL0	PL0	PASSA / PASS	PASSA / PASS
TARGA / RECTANGLE	460X80	FERRO / STEEL	1	3			≤ 37	WL6	TDB3	DSL0	PL0	PASSA / PASS	PASSA / PASS
ROMBO / DIAMOND	90	FERRO / STEEL	1		3		≤ 35	WL7	TDB2	DSL0	PL0	PASSA / PASS	PASSA / PASS
TARGA / RECTANGLE	90X90	FERRO / STEEL	1		3		≤ 34	WL7	TDB2	DSL0	PL0	PASSA / PASS	PASSA / PASS
TARGA / RECTANGLE	90X90	FERRO / STEEL	1		2		≤ 54	WL5	TDB3	DSL0	PL0	PASSA / PASS	PASSA / PASS
TARGA / RECTANGLE	120X90	FERRO / STEEL	1		2		≤ 54	WL5	TDB3	DSL0	PL0	PASSA / PASS	PASSA / PASS
TARGA / RECTANGLE	120X90	FERRO / STEEL	1		3		≤ 50	WL7	TDB3	DSL0	PL0	PASSA / PASS	PASSA / PASS
TARGA DOPPIA BASE / DOUBLE BASE RECTANGLE	120X90	FERRO / STEEL	1		2+2		≤ 50 / 125	WL6	TDB3	DSL0	PL0	PASSA / PASS	PASSA / PASS
TARGA / RECTANGLE	135X90	FERRO / STEEL	1		3		≤ 50	WL7	TDB3	DSL0	PL0	PASSA / PASS	PASSA / PASS
TARGA DOPPIA BASE / DOUBLE BASE RECTANGLE	135X90	FERRO / STEEL	1		2+2		≤ 50 / 125	WL6	TDB4	DSL0	PL0	PASSA / PASS	PASSA / PASS
TARGA / RECTANGLE	460X90	FERRO / STEEL	1	3			≤ 37	WL6	TDB3	DSL0	PL0	PASSA / PASS	PASSA / PASS
TARGA / RECTANGLE	480X90	FERRO / STEEL	1		2		≤ 50	WL7	TDB4	DSL0	PL0	PASSA / PASS	PASSA / PASS
TARGA / RECTANGLE	240X90	FERRO / STEEL	1		3		≤ 50	WL7	TDB3	DSL0	PL0	PASSA / PASS	PASSA / PASS
TARGA IN 2 PEZZI / RECTANGLE IN 2 PIECES	240X90	FERRO / STEEL	1		3		≤ 50	WL7	TDB3	DSL0	PL0	PASSA / PASS	PASSA / PASS
TARGA / RECTANGLE	20X100	FERRO / STEEL	1	2			≤ 60	WL7	TDB3	DSL0	PL0	PASSA / PASS	PASSA / PASS
TARGA / RECTANGLE	26X100	FERRO / STEEL	1	2			≤ 60	WL7	TDB3	DSL0	PL0	PASSA / PASS	PASSA / PASS
TARGA / RECTANGLE	30X100	FERRO / STEEL	1	2			≤ 60	WL7	TDB3	DSL0	PL0	PASSA / PASS	PASSA / PASS
TARGA / RECTANGLE	100X100	FERRO / STEEL	1		3		≤ 60	WL7	TDB3	DSL0	PL0	PASSA / PASS	PASSA / PASS
TARGA / RECTANGLE	120X100	FERRO / STEEL	1		3		≤ 60	WL7	TDB3	DSL0	PL0	PASSA / PASS	PASSA / PASS
TARGA / RECTANGLE	125X100	FERRO / STEEL	1		3		≤ 60	WL7	TDB3	DSL0	PL0	PASSA / PASS	PASSA / PASS
TARGA / RECTANGLE	130X100	FERRO / STEEL	1		3		≤ 60	WL7	TDB3	DSL0	PL0	PASSA / PASS	PASSA / PASS
TARGA / RECTANGLE	150X100	FERRO / STEEL	1		3		≤ 60	WL7	TDB3	DSL0	PL0	PASSA / PASS	PASSA / PASS
TARGA DOPPIA BASE / DOUBLE BASE RECTANGLE	150X100	FERRO / STEEL	1		3+2		≤ 55 / 190	WL6	TDB4	DSL0	PL0	PASSA / PASS	PASSA / PASS
TARGA / RECTANGLE	160X100	FERRO / STEEL	1		3		≤ 50	WL7	TDB3	DSL0	PL0	PASSA / PASS	PASSA / PASS
TARGA / RECTANGLE	200X100	FERRO / STEEL	1		3		≤ 60	WL7	TDB3	DSL0	PL0	PASSA / PASS	PASSA / PASS
TARGA DOPPIA BASE / DOUBLE BASE RECTANGLE	200X100	FERRO / STEEL	1		3+2		≤ 55 / 190	WL6	TDB4	DSL0	PL0	PASSA / PASS	PASSA / PASS
TARGA / RECTANGLE	250X100	FERRO / STEEL	1		3		≤ 50	WL7	TDB3	DSL0	PL0	PASSA / PASS	PASSA / PASS
TARGA / RECTANGLE	300X100	FERRO / STEEL	1		3		≤ 50	WL7	TDB3	DSL0	PL0	PASSA / PASS	PASSA / PASS
TARGA / RECTANGLE	70X105	FERRO / STEEL	1		3		≤ 34	WL7	TDB3	DSL0	PL0	PASSA / PASS	PASSA / PASS
TARGA / RECTANGLE	105X105	FERRO / STEEL	1		3		≤ 34	WL7	TDB2	DSL0	PL0	PASSA / PASS	PASSA / PASS
TARGA / RECTANGLE	60X120	FERRO / STEEL	1		3		≤ 50	WL7	TDB3	DSL0	PL0	PASSA / PASS	PASSA / PASS
TARGA / RECTANGLE	80X120	FERRO / STEEL	1		3		≤ 50	WL7	TDB3	DSL0	PL0	PASSA / PASS	PASSA / PASS
TARGA / RECTANGLE	120X120	FERRO / STEEL	1		3		≤ 50	WL7	TDB3	DSL0	PL0	PASSA / PASS	PASSA / PASS
TARGA / RECTANGLE	160X120	FERRO / STEEL	1		3		≤ 50	WL7	TDB3	DSL0	PL0	PASSA / PASS	PASSA / PASS
TARGA / RECTANGLE	180X120	FERRO / STEEL	1		3		≤ 50	WL7	TDB3	DSL0	PL0	PASSA / PASS	PASSA / PASS
TARGA / RECTANGLE	200X120	FERRO / STEEL	1		3		≤ 50	WL7	TDB3	DSL0	PL0	PASSA / PASS	PASSA / PASS
TARGA / RECTANGLE	250X120	FERRO / STEEL	1		3		≤ 50	WL7	TDB3	DSL0	PL0	PASSA / PASS	PASSA / PASS
TARGA / RECTANGLE	300X120	FERRO / STEEL	1		3		≤ 50	WL7	TDB3	DSL0	PL0	PASSA / PASS	PASSA / PASS
TARGA / RECTANGLE	125X125	FERRO / STEEL	1		3		≤ 50	WL7	TDB3	DSL0	PL0	PASSA / PASS	PASSA / PASS
TARGA / RECTANGLE	150X125	FERRO / STEEL	1		3		≤ 50	WL7	TDB3	DSL0	PL0	PASSA / PASS	PASSA / PASS
TARGA / RECTANGLE	180X125	FERRO / STEEL	1		3		≤ 50	WL7	TDB3	DSL0	PL0	PASSA / PASS	PASSA / PASS
TARGA / RECTANGLE	200X125	FERRO / STEEL	1		3		≤ 50	WL7	TDB3	DSL0	PL0	PASSA / PASS	PASSA / PASS

TIPOLOGIA / TYPOLOGY	DIMENSIONI (CM) / DIMENSIONS (CM)	MATERIALE / MATERIAL	SPESSORE (MM) / THICKNESS (MM)	SISTEMA AGGANCIO / FIXING SYSTEM: N. ATTACCHI / NO. CLAMPS	N. RINFORZI CORSOIO NORMALE / NO. NORMAL SLIDER REINFORCEMENTS	N. RINFORZI CORSOIO TRAVERSE / NO. ROD SLIDER REINFORCEMENTS	INTERASSE MAX DI CALCOLO ATTACCHI / MAXIMUM DISTANCE CALCULATION CLAMPS	RESISTENZA AI CARICHI ORIZZONTALI */ RESISTANCE TO HORIZONTAL LOADS: AZIONE DEL VENTO / WIND ACTION	DEFORMAZIONE TEMPORANEA FLETTENTE / TEMPORARY DEFLECTION BENDING	CARICO DINAMICO DA RINCOCCIONE DI NEVE / DYNAMIC SNOW LOAD	CARICHI CONCENTRATI / POINTS LOADS	DEFORMAZIONE PERMANENTE / PERMANENT DEFLECTION	FORATURE / FORINGS
TARGA / RECTANGLE	85X135	FERRO / STEEL	1	3			49	WL7	TDB3	DSL0	PL0	PASSA / PASS	PASSA / PASS
TARGA / RECTANGLE	90X135	FERRO / STEEL	1		3		≤ 50	WL7	TDB3	DSL0	PL0	PASSA / PASS	PASSA / PASS
TARGA / RECTANGLE	135X135	FERRO / STEEL	1		3		≤ 50	WL7	TDB3	DSL0	PL0	PASSA / PASS	PASSA / PASS
TARGA / RECTANGLE	180X135	FERRO / STEEL	1		3		≤ 50	WL7	TDB3	DSL0	PL0	PASSA / PASS	PASSA / PASS
TARGA / RECTANGLE	200X135	FERRO / STEEL	1		3		≤ 50	WL7	TDB3	DSL0	PL0	PASSA / PASS	PASSA / PASS
TARGA DOPPIA BASE / DOUBLE BASE RECTANGLE	250X135	FERRO / STEEL	1		3+2		≤ 55 / 100	WL6	TDB4	DSL0	PL0	PASSA / PASS	PASSA / PASS
TARGA / RECTANGLE	100X150	FERRO / STEEL	1		3+ANGOLARE 3+ANGLE BAR		≤ 55	WL7	TDB2	DSL0	PL0	PASSA / PASS	PASSA / PASS
TARGA / RECTANGLE	130X150	FERRO / STEEL	1		3+ANGOLARE 3+ANGLE BAR		≤ 55	WL7	TDB2	DSL0	PL0	PASSA / PASS	PASSA / PASS
TARGA / RECTANGLE	150X150	FERRO / STEEL	1		3+ANGOLARE 3+ANGLE BAR		≤ 55	WL7	TDB2	DSL0	PL0	PASSA / PASS	PASSA / PASS
TARGA / RECTANGLE	180X150	FERRO / STEEL	1		3+ANGOLARE 3+ANGLE BAR		≤ 55	WL7	TDB2	DSL0	PL0	PASSA / PASS	PASSA / PASS
TARGA / RECTANGLE	200X150	FERRO / STEEL	1		3+ANGOLARE 3+ANGLE BAR		≤ 55	WL7	TDB2	DSL0	PL0	PASSA / PASS	PASSA / PASS
TARGA DOPPIA BASE / DOUBLE BASE RECTANGLE	200X150	FERRO / STEEL	1		3+2		≤ 55 / 100	WL6	TDB4	DSL0	PL0	PASSA / PASS	PASSA / PASS
TARGA / RECTANGLE	250X150	FERRO / STEEL	1		3+ANGOLARE 3+ANGLE BAR		≤ 55	WL7	TDB3	DSL0	PL0	PASSA / PASS	PASSA / PASS
TARGA / RECTANGLE	300X150	FERRO / STEEL	1		3+ANGOLARE 3+ANGLE BAR		≤ 55	WL7	TDB3	DSL0	PL0	PASSA / PASS	PASSA / PASS
TARGA / RECTANGLE	100X160	FERRO / STEEL	1		4		≤ 50	WL7	TDB3	DSL0	PL0	PASSA / PASS	PASSA / PASS
TARGA / RECTANGLE	90X165	FERRO / STEEL	1		4		≤ 50	WL7	TDB3	DSL0	PL0	PASSA / PASS	PASSA / PASS
TARGA / RECTANGLE	130X170	FERRO / STEEL	1		4		≤ 50	WL7	TDB3	DSL0	PL0	PASSA / PASS	PASSA / PASS
TARGA / RECTANGLE	80X180	FERRO / STEEL	1		4		≤ 50	WL7	TDB3	DSL0	PL0	PASSA / PASS	PASSA / PASS
TARGA / RECTANGLE	100X180	FERRO / STEEL	1		4		≤ 50	WL7	TDB3	DSL0	PL0	PASSA / PASS	PASSA / PASS
TARGA IN 2 PEZZI / RECTANGLE IN 2 PIECES	270X180	FERRO / STEEL	1		3+3		≤ 50	WL7	TDB4	DSL0	PL0	PASSA / PASS	PASSA / PASS
TARGA / RECTANGLE	130X190	FERRO / STEEL	1		4		≤ 50	WL7	TDB3	DSL0	PL0	PASSA / PASS	PASSA / PASS
TARGA / RECTANGLE	100X200	FERRO / STEEL	1		4+ANGOLARE 4+ANGLE BAR		≤ 55	WL7	TDB3	DSL0	PL0	PASSA / PASS	PASSA / PASS
TARGA / RECTANGLE	135X200	FERRO / STEEL	1		4+ANGOLARE 4+ANGLE BAR		≤ 55	WL7	TDB3	DSL0	PL0	PASSA / PASS	PASSA / PASS
TARGA / RECTANGLE	150X200	FERRO / STEEL	1		4+ANGOLARE 4+ANGLE BAR		≤ 55	WL7	TDB3	DSL0	PL0	PASSA / PASS	PASSA / PASS
TARGA IN 2 PEZZI / RECTANGLE IN 2 PIECES	200X200	FERRO / STEEL	1		3+3		≤ 50	WL7	TDB4	DSL0	PL0	PASSA / PASS	PASSA / PASS
TARGA IN 2 PEZZI / RECTANGLE IN 2 PIECES	250X200	FERRO / STEEL	1		3+3		≤ 50	WL7	TDB4	DSL0	PL0	PASSA / PASS	PASSA / PASS
TARGA IN 2 PEZZI / RECTANGLE IN 2 PIECES	270X200	FERRO / STEEL	1		3+3		≤ 50	WL7	TDB4	DSL0	PL0	PASSA / PASS	PASSA / PASS
TARGA IN 2 PEZZI / RECTANGLE IN 2 PIECES	340X200	FERRO / STEEL	1		3+3		≤ 50	WL7	TDB4	DSL0	PL0	PASSA / PASS	PASSA / PASS
TARGA / RECTANGLE	60X220	FERRO / STEEL	1		5		≤ 50	WL7	TDB3	DSL0	PL0	PASSA / PASS	PASSA / PASS
TARGA / RECTANGLE	120X220	FERRO / STEEL	1		5		≤ 50	WL7	TDB3	DSL0	PL0	PASSA / PASS	PASSA / PASS
TARGA IN 2 PEZZI / RECTANGLE IN 2 PIECES	170X220	FERRO / STEEL	1		3+3		≤ 50	WL7	TDB4	DSL0	PL0	PASSA / PASS	PASSA / PASS
TARGA IN 2 PEZZI / RECTANGLE IN 2 PIECES	300X220	FERRO / STEEL	1		3+3		≤ 50	WL7	TDB4	DSL0	PL0	PASSA / PASS	PASSA / PASS
TARGA / RECTANGLE	90X250	FERRO / STEEL	1		5+ANGOLARE 5+ANGLE BAR		≤ 55	WL7	TDB3	DSL0	PL0	PASSA / PASS	PASSA / PASS
TARGA / RECTANGLE	150X250	FERRO / STEEL	1		5+ANGOLARE 5+ANGLE BAR		≤ 55	WL7	TDB3	DSL0	PL0	PASSA / PASS	PASSA / PASS
TARGA IN 2 PEZZI / RECTANGLE IN 2 PIECES	200X250	FERRO / STEEL	1		3+3		≤ 50	WL7	TDB4	DSL0	PL0	PASSA / PASS	PASSA / PASS
TARGA IN 2 PEZZI / RECTANGLE IN 2 PIECES	250X250	FERRO / STEEL	1		3+3		≤ 50	WL7	TDB4	DSL0	PL0	PASSA / PASS	PASSA / PASS
TARGA IN 2 PEZZI / RECTANGLE IN 2 PIECES	300X250	FERRO / STEEL	1		3+3		≤ 50	WL7	TDB4	DSL0	PL0	PASSA / PASS	PASSA / PASS
TARGA IN 2 PEZZI / RECTANGLE IN 2 PIECES	400X250	FERRO / STEEL	1			3+3	≤ 50	WL7	TDB4	DSL0	PL0	PASSA / PASS	PASSA / PASS
TARGA / RECTANGLE	135X270	FERRO / STEEL	1		6		≤ 50	WL7	TDB3	DSL0	PL0	PASSA / PASS	PASSA / PASS
TARGA / RECTANGLE	120X300	FERRO / STEEL	1		6+ANGOLARE 6+ANGLE BAR		≤ 55	WL7	TDB3	DSL0	PL0	PASSA / PASS	PASSA / PASS
TARGA / RECTANGLE	150X300	FERRO / STEEL	1		6+ANGOLARE 6+ANGLE BAR		≤ 55	WL7	TDB3	DSL0	PL0	PASSA / PASS	PASSA / PASS
TARGA IN 2 PEZZI / RECTANGLE IN 2 PIECES	170X300	FERRO / STEEL	1		3+3+ANGOLARE 3+3+ANGLE BAR		≤ 55	WL7	TDB4	DSL0	PL0	PASSA / PASS	PASSA / PASS
TARGA IN 2 PEZZI / RECTANGLE IN 2 PIECES	200X300	FERRO / STEEL	1		3+3+ANGOLARE 3+3+ANGLE BAR		≤ 55	WL7	TDB4	DSL0	PL0	PASSA / PASS	PASSA / PASS
TARGA IN 2 PEZZI / RECTANGLE IN 2 PIECES	225X300	FERRO / STEEL	1		3+3+ANGOLARE 3+3+ANGLE BAR		≤ 55	WL7	TDB4	DSL0	PL0	PASSA / PASS	PASSA / PASS
TARGA IN 2 PEZZI / RECTANGLE IN 2 PIECES	250X300	FERRO / STEEL	1		3+3+ANGOLARE 3+3+ANGLE BAR		≤ 55	WL7	TDB4	DSL0	PL0	PASSA / PASS	PASSA / PASS
TARGA IN 2 PEZZI / RECTANGLE IN 2 PIECES	275X300	FERRO / STEEL	1		3+3+ANGOLARE 3+3+ANGLE BAR		≤ 55	WL7	TDB4	DSL0	PL0	PASSA / PASS	PASSA / PASS
TARGA IN 2 PEZZI / RECTANGLE IN 2 PIECES	300X300	FERRO / STEEL	1		3+3+ANGOLARE 3+3+ANGLE BAR		≤ 55	WL7	TDB4	DSL0	PL0	PASSA / PASS	PASSA / PASS

CARATTERISTICHE TECNICHE PANNELLO IN ALLUMINIO EN 12899-1:2007

TIPOLOGIA / TYPOLOGY	DIMENSIONI (CM) / DIMENSIONS (CM)	MATERIALE / MATERIAL	SPESSORE (MM) / THICKNESS (MM)	SISTEMA AGGANCIO / FIXING SYSTEM: N. ATTACCHI / NO. CLAMPS	SISTEMA AGGANCIO / FIXING SYSTEM: N. RINFORZI CURSORE NORMALE / NO. NORMAL SLIDER REINFORCEMENTS	SISTEMA AGGANCIO / FIXING SYSTEM: N. RINFORZI CURSORE TRAVERSE / NO. ROD SLIDER REINFORCEMENTS	SISTEMA AGGANCIO / FIXING SYSTEM: INTERASSE MAX DI CALCOLO ATTACCHI / MAXIMUM DISTANCE CALCULATION CLAMPS	RESISTENZA AI CARICHI ORIZZONTALI / RESISTANCE TO HORIZONTAL LOADS: AZIONE DEL VENTO / WIND ACTION	RESISTENZA AI CARICHI ORIZZONTALI / RESISTANCE TO HORIZONTAL LOADS: DEFORMAZIONE TEMPORANEA FLETTENTE / TEMPORARY DEFLECTION BENDING	RESISTENZA AI CARICHI ORIZZONTALI / RESISTANCE TO HORIZONTAL LOADS: CARICO SIMULATO DA NEVICATA / DYNAMIC SNOW LOAD	RESISTENZA AI CARICHI ORIZZONTALI / RESISTANCE TO HORIZONTAL LOADS: CARICHI CONCENTRATI / POINTS LOADS	RESISTENZA AI CARICHI ORIZZONTALI / RESISTANCE TO HORIZONTAL LOADS: DEFORMAZIONE PERMANENTE / PERMANENT DEFLECTION	RESISTENZA AI CARICHI ORIZZONTALI / RESISTANCE TO HORIZONTAL LOADS: FISSAGGI / FIXINGS
TARGA IN 3 PEZZI / RECTANGLE IN 3 PIECES	300X150	FERRO / STEEL	1		3+3+3		≤ 54	WL7	TDB4	DSL0	PL0	PASSA / PASS	PASSA / PASS
TARGA IN 3 PEZZI / RECTANGLE IN 3 PIECES	300X400	FERRO / STEEL	1		3+3+3		≤ 56	WL7	TDB4	DSL0	PL0	PASSA / PASS	PASSA / PASS
CROCI S. ANDREA NORMALE / NORMAL CROSSBUCK	-	FERRO / STEEL	1	4			-	WL7	TDB2	DSL0	PL0	PASSA / PASS	PASSA / PASS
CROCI S. ANDREA DOPPIA / DOUBLE CROSSBUCK	-	FERRO / STEEL	1	6			-	WL7	TDB2	DSL0	PL0	PASSA / PASS	PASSA / PASS
TARGA FUORI STANDARD / NO STANDARD RECTANGLE	≤ 3 MQ	FERRO / STEEL	1		ADEGUATI / APPROPRIATE		≤ 50	WL7	TDB3/TDB4	DSL0	PL0	PASSA / PASS	PASSA / PASS
TARGA FUORI STANDARD / NO STANDARD RECTANGLE	> 3 MQ	FERRO / STEEL	1		ADEGUATI / APPROPRIATE		≤ 50	WL7	TDB3/TDB4	DSL0	PL0	PASSA / PASS	PASSA / PASS
TRIANGOLO / TRIANGLE	60	ALLUMINIO / ALUMINUM	2,5	2			32	WL7	TDB1	DSL0	PL0	PASSA / PASS	PASSA / PASS
TRIANGOLO / TRIANGLE	90	ALLUMINIO / ALUMINUM	2,5		2		32	WL7	TDB1	DSL0	PL0	PASSA / PASS	PASSA / PASS
TRIANGOLO / TRIANGLE	90	ALLUMINIO / ALUMINUM	2,5	2			64	WL7	TDB3	DSL0	PL0	PASSA / PASS	PASSA / PASS
TRIANGOLO / TRIANGLE	90	ALLUMINIO / ALUMINUM	2,5		2		64	WL7	TDB3	DSL0	PL0	PASSA / PASS	PASSA / PASS
TRIANGOLO / TRIANGLE	120	ALLUMINIO / ALUMINUM	2,5	3			28	WL1	TDB3	DSL0	PL0	PASSA / PASS	PASSA / PASS
TRIANGOLO / TRIANGLE	120	ALLUMINIO / ALUMINUM	2,5		2		58	WL7	TDB2	DSL0	PL0	PASSA / PASS	PASSA / PASS
DISCO / CIRCLE	40	ALLUMINIO / ALUMINUM	2,5	2			27	WL7	TDB3	DSL0	PL0	PASSA / PASS	PASSA / PASS
DISCO / CIRCLE	60	ALLUMINIO / ALUMINUM	2,5	1+BUSCOLA 1+BUSH			-	WL3	TDB3	DSL0	PL0	PASSA / PASS	PASSA / PASS
DISCO / CIRCLE	60	ALLUMINIO / ALUMINUM	2,5	2			44	WL7	TDB3	DSL0	PL0	PASSA / PASS	PASSA / PASS
DISCO / CIRCLE	60	ALLUMINIO / ALUMINUM	2,5	2			44	WL7	TDB3	DSL0	PL0	PASSA / PASS	PASSA / PASS
DISCO / CIRCLE	60	ALLUMINIO / ALUMINUM	2,5		2		44	WL7	TDB4	DSL0	PL0	PASSA / PASS	PASSA / PASS
DISCO / CIRCLE	90	ALLUMINIO / ALUMINUM	2,5		1+BUSSOLA 1+BUSH		-	WL2	TDB2	DSL0	PL0	PASSA / PASS	PASSA / PASS
DISCO / CIRCLE	90	ALLUMINIO / ALUMINUM	2,5	3			29	WL2	TDB3	DSL0	PL0	PASSA / PASS	PASSA / PASS
DISCO / CIRCLE	90	ALLUMINIO / ALUMINUM	2,5		2		≤ 54	WL7	TDB4	DSL0	PL0	PASSA / PASS	PASSA / PASS
OTTAGONO / OCTAGON	60	ALLUMINIO / ALUMINUM	2,5	2			≤ 44	WL7	TDB3	DSL0	PL0	PASSA / PASS	PASSA / PASS
OTTAGONO / OCTAGON	60	ALLUMINIO / ALUMINUM	2,5		2		≤ 54	WL7	TDB4	DSL0	PL0	PASSA / PASS	PASSA / PASS
OTTAGONO / OCTAGON	90	ALLUMINIO / ALUMINUM	2,5		2		≤ 56	WL7	TDB4	DSL0	PL0	PASSA / PASS	PASSA / PASS
OTTAGONO / OCTAGON	120	ALLUMINIO / ALUMINUM	2,5		2		58	WL7	TDB4	DSL0	PL0	PASSA / PASS	PASSA / PASS
FRECCIA / ARROW	130X30	ALLUMINIO / ALUMINUM	2,5		2		≤ 45	WL7	TDB4	DSL0	PL0	PASSA / PASS	PASSA / PASS
FRECCIA / ARROW	150X40	ALLUMINIO / ALUMINUM	2,5		2		≤ 45	WL7	TDB4	DSL0	PL0	PASSA / PASS	PASSA / PASS
FRECCIA / ARROW	170X50	ALLUMINIO / ALUMINUM	2,5		2		≤ 45	WL7	TDB4	DSL0	PL0	PASSA / PASS	PASSA / PASS
FRECCIA / ARROW	200X50	ALLUMINIO / ALUMINUM	2,5		2		≤ 45	WL7	TDB4	DSL0	PL0	PASSA / PASS	PASSA / PASS
FRECCIA / ARROW	250X70	ALLUMINIO / ALUMINUM	2,5		2		≤ 45	WL7	TDB4	DSL0	PL0	PASSA / PASS	PASSA / PASS
FRECCIA / ARROW	300X70	ALLUMINIO / ALUMINUM	2,5			2	≤ 45	WL7	TDB4	DSL0	PL0	PASSA / PASS	PASSA / PASS
FRECCIA / ARROW	350X70	ALLUMINIO / ALUMINUM	2,5			2	≤ 45	WL7	TDB4	DSL0	PL0	PASSA / PASS	PASSA / PASS
FRECCIA IN 2 PEZZI / ARROW IN 2 PIECES	400X70	ALLUMINIO / ALUMINUM	2,5			2	≤ 45	WL7	TDB4	DSL0	PL0	PASSA / PASS	PASSA / PASS
FRECCIA / ARROW	300X100	ALLUMINIO / ALUMINUM	2,5			2	≤ 45	WL7	TDB4	DSL0	PL0	PASSA / PASS	PASSA / PASS
FRECCIA / ARROW	350X100	ALLUMINIO / ALUMINUM	2,5			2	≤ 45	WL7	TDB4	DSL0	PL0	PASSA / PASS	PASSA / PASS
FRECCIA IN 2 PEZZI / ARROW IN 2 PIECES	400X100	ALLUMINIO / ALUMINUM	2,5			2	≤ 45	WL7	TDB4	DSL0	PL0	PASSA / PASS	PASSA / PASS
TARGA / RECTANGLE	25X10	ALLUMINIO / ALUMINUM	2,5	1			-	WL7	TDB3	DSL0	PL0	PASSA / PASS	PASSA / PASS
TARGA / RECTANGLE	35X15	ALLUMINIO / ALUMINUM	2,5	1			-	WL7	TDB3	DSL0	PL0	PASSA / PASS	PASSA / PASS
TARGA / RECTANGLE	30X17	ALLUMINIO / ALUMINUM	2,5	1			-	WL7	TDB3	DSL0	PL0	PASSA / PASS	PASSA / PASS
TARGA / RECTANGLE	50X18	ALLUMINIO / ALUMINUM	2,5	1			-	WL7	TDB2	DSL0	PL0	PASSA / PASS	PASSA / PASS
TARGA / RECTANGLE	20X20	ALLUMINIO / ALUMINUM	2,5	1			-	WL7	TDB3	DSL0	PL0	PASSA / PASS	PASSA / PASS
TARGA / RECTANGLE	30X20	ALLUMINIO / ALUMINUM	2,5	1			-	WL7	TDB3	DSL0	PL0	PASSA / PASS	PASSA / PASS
TARGA / RECTANGLE	40X20	ALLUMINIO / ALUMINUM	2,5	1			-	WL7	TDB3	DSL0	PL0	PASSA / PASS	PASSA / PASS
TARGA / RECTANGLE	80X20	ALLUMINIO / ALUMINUM	2,5	2			≤ 18	WL7	TDB2	DSL0	PL0	PASSA / PASS	PASSA / PASS
TARGA DOPPIA BASE / DOUBLE BASE RECTANGLE	80X20	ALLUMINIO / ALUMINUM	2,5	2+2			≤ 16	WL7	TDB2	DSL0	PL0	PASSA / PASS	PASSA / PASS
TARGA / RECTANGLE	100X20	ALLUMINIO / ALUMINUM	2,5	2+2			-	WL7	TDB2	DSL0	PL0	PASSA / PASS	PASSA / PASS
TARGA / RECTANGLE	100X20	ALLUMINIO / ALUMINUM	2,5	2+2			≤ 18	WL3	TDB3	DSL0	PL0	PASSA / PASS	PASSA / PASS
TARGA / RECTANGLE	100X20	ALLUMINIO / ALUMINUM	2,5		1		-	WL7	TDB2	DSL0	PL0	PASSA / PASS	PASSA / PASS
TARGA / RECTANGLE	140X25	ALLUMINIO / ALUMINUM	2,5	1			-	WL7	TDB3	DSL0	PL0	PASSA / PASS	PASSA / PASS
TARGA / RECTANGLE	25X25	ALLUMINIO / ALUMINUM	2,5	1			-	WL7	TDB3	DSL0	PL0	PASSA / PASS	PASSA / PASS
TARGA / RECTANGLE	25X25	ALLUMINIO / ALUMINUM	2,5	2			≤ 44	WL7	TDB3	DSL0	PL0	PASSA / PASS	PASSA / PASS
TARGA / RECTANGLE	50X25	ALLUMINIO / ALUMINUM	2,5	2			≤ 44	WL7	TDB3	DSL0	PL0	PASSA / PASS	PASSA / PASS
TARGA DOPPIA BASE / DOUBLE BASE RECTANGLE	50X25	ALLUMINIO / ALUMINUM	2,5	2+2			≤ 44	WL7	TDB3	DSL0	PL0	PASSA / PASS	PASSA / PASS
TARGA / RECTANGLE	80X25	ALLUMINIO / ALUMINUM	2,5	2			≤ 16	WL7	TDB2	DSL0	PL0	PASSA / PASS	PASSA / PASS
TARGA / RECTANGLE	100X25	ALLUMINIO / ALUMINUM	2,5	2+2			-	WL7	TDB2	DSL0	PL0	PASSA / PASS	PASSA / PASS
TARGA / RECTANGLE	100X25	ALLUMINIO / ALUMINUM	2,5	2+2			≤ 16	WL3	TDB3	DSL0	PL0	PASSA / PASS	PASSA / PASS
TARGA / RECTANGLE	100X25	ALLUMINIO / ALUMINUM	2,5		2		≤ 18	WL7	TDB3	DSL0	PL0	PASSA / PASS	PASSA / PASS
TARGA / RECTANGLE	125X25	ALLUMINIO / ALUMINUM	2,5	2+2			-	WL7	TDB2	DSL0	PL0	PASSA / PASS	PASSA / PASS
TARGA / RECTANGLE	125X25	ALLUMINIO / ALUMINUM	2,5	2+2			≤ 18	WL3	TDB3	DSL0	PL0	PASSA / PASS	PASSA / PASS
TARGA / RECTANGLE	125X25	ALLUMINIO / ALUMINUM	2,5		2		≤ 90	WL7	TDB4	DSL0	PL0	PASSA / PASS	PASSA / PASS

TIPOLOGIA / TYPOLOGY	DIMENSIONI (CM) / DIMENSIONS (CM)	MATERIALE / MATERIAL	SPESSORE (MM) / THICKNESS (MM)	SISTEMA AGGANCIO / FIXING SYSTEM: N. ATTACCHI / NO. CLAMPS	N. RINFORZI CORSOIO NORMALE / NO. NORMAL SLIDER REINFORCEMENTS	N. RINFORZI CORSOIO TRAVERSE / NO. ROD SLIDER REINFORCEMENTS	INTERASSE MAX DI CALCOLO ATTACCHI / MAXIMUM DISTANCE CALCULATION CLAMPS	RESISTENZA AI CARICHI ORIZZONTALI */ RESISTANCE TO HORIZONTAL LOADS: AZIONE DEL VENTO / WIND ACTION	DEFORMAZIONE TEMPORANEA FLETTENTE / TEMPORARY DEFLECTION BENDING	CARICO DINAMICO DA RIMOZIONE DI NEVE / DYNAMIC SNOW LOAD	CARICHI CONCENTRATI / POINTS LOADS	DEFORMAZIONE PERMANENTE / PERMANENT DEFLECTION	FISSAGGI / FIXINGS
TARGA / RECTANGLE	160X26	ALLUMINIO / ALUMINUM	2,5		2		≤ 90	WL7	TDB4	DSL0	PL0	PASSA / PASS	PASSA / PASS
TARGA / RECTANGLE	180X26	ALLUMINIO / ALUMINUM	2,5		2		≤ 90	WL7	TDB4	DSL0	PL0	PASSA / PASS	PASSA / PASS
TARGA / RECTANGLE	200X26	ALLUMINIO / ALUMINUM	2,5		2		< 90	WL7	TDB4	DSL0	PL0	PASSA / PASS	PASSA / PASS
TARGA / RECTANGLE	80X27	ALLUMINIO / ALUMINUM	2,5	2			≤ 15	WL7	TDB2	DSL0	PL0	PASSA / PASS	PASSA / PASS
TARGA / RECTANGLE	80X27	ALLUMINIO / ALUMINUM	2,5		2		< 50	WL7	TDB4	DSL0	PL0	PASSA / PASS	PASSA / PASS
TARGA / RECTANGLE	20X30	ALLUMINIO / ALUMINUM	2,5	1			-	WL7	TDB3	DSL0	PL0	PASSA / PASS	PASSA / PASS
TARGA / RECTANGLE	40X30	ALLUMINIO / ALUMINUM	2,5	2			≤ 44	WL7	TDB3	DSL0	PL0	PASSA / PASS	PASSA / PASS
TARGA DOPPIA BASE / DOUBLE BASE RECTANGLE	40X30	ALLUMINIO / ALUMINUM	2,5	2+2			≤ 44	WL7	TDB3	DSL0	PL0	PASSA / PASS	PASSA / PASS
TARGA / RECTANGLE	50X30	ALLUMINIO / ALUMINUM	2,5	2			≤ 44	WL7	TDB3	DSL0	PL0	PASSA / PASS	PASSA / PASS
TARGA DOPPIA BASE / DOUBLE BASE RECTANGLE	50X30	ALLUMINIO / ALUMINUM	2,5	2+2			≤ 44	WL7	TDB3	DSL0	PL0	PASSA / PASS	PASSA / PASS
TARGA / RECTANGLE	60X30	ALLUMINIO / ALUMINUM	2,5	2			≤ 44	WL7	TDB3	DSL0	PL0	PASSA / PASS	PASSA / PASS
TARGA / RECTANGLE	80X30	ALLUMINIO / ALUMINUM	2,5		1		-	WL7	TDB2	DSL0	PL0	PASSA / PASS	PASSA / PASS
TARGA / RECTANGLE	80X30	ALLUMINIO / ALUMINUM	2,5		2		< 60	WL7	TDB3	DSL0	PL0	PASSA / PASS	PASSA / PASS
TARGA / RECTANGLE	100X30	ALLUMINIO / ALUMINUM	2,5		2		≤ 60	WL7	TDB3	DSL0	PL0	PASSA / PASS	PASSA / PASS
TARGA / RECTANGLE	120X30	ALLUMINIO / ALUMINUM	2,5		2		≤ 90	WL7	TDB4	DSL0	PL0	PASSA / PASS	PASSA / PASS
TARGA / RECTANGLE	140X30	ALLUMINIO / ALUMINUM	2,5		2		≤ 90	WL7	TDB4	DSL0	PL0	PASSA / PASS	PASSA / PASS
TARGA / RECTANGLE	150X30	ALLUMINIO / ALUMINUM	2,5		2		≤ 90	WL7	TDB4	DSL0	PL0	PASSA / PASS	PASSA / PASS
TARGA / RECTANGLE	180X30	ALLUMINIO / ALUMINUM	2,5		2		≤ 90	WL7	TDB4	DSL0	PL0	PASSA / PASS	PASSA / PASS
TARGA / RECTANGLE	200X30	ALLUMINIO / ALUMINUM	2,5		2		≤ 90	WL7	TDB4	DSL0	PL0	PASSA / PASS	PASSA / PASS
TARGA / RECTANGLE	75X35	ALLUMINIO / ALUMINUM	2,5		2		≤ 55	WL7	TDB4	DSL0	PL0	PASSA / PASS	PASSA / PASS
TARGA / RECTANGLE	15X35	ALLUMINIO / ALUMINUM	2,5	1			-	WL7	TDB3	DSL0	PL0	PASSA / PASS	PASSA / PASS
TARGA / RECTANGLE	105X35	ALLUMINIO / ALUMINUM	2,5		2		≤ 60	WL7	TDB3	DSL0	PL0	PASSA / PASS	PASSA / PASS
TARGA / RECTANGLE	125X35	ALLUMINIO / ALUMINUM	2,5		2		≤ 90	WL7	TDB4	DSL0	PL0	PASSA / PASS	PASSA / PASS
ROMBO / DIAMOND	40	ALLUMINIO / ALUMINUM	2,5	2			≤ 44	WL7	TDB4	DSL0	PL0	PASSA / PASS	PASSA / PASS
TARGA / RECTANGLE	40X40	ALLUMINIO / ALUMINUM	2,5	2			≤ 44	WL7	TDB3	DSL0	PL0	PASSA / PASS	PASSA / PASS
TARGA DOPPIA BASE / DOUBLE BASE RECTANGLE	60X40	ALLUMINIO / ALUMINUM	2,5	2+2			≤ 44	WL7	TDB3	DSL0	PL0	PASSA / PASS	PASSA / PASS
TARGA / RECTANGLE	60X40	ALLUMINIO / ALUMINUM	2,5	2			≤ 44	WL7	TDB3	DSL0	PL0	PASSA / PASS	PASSA / PASS
TARGA DOPPIA BASE / DOUBLE BASE RECTANGLE	60X40	ALLUMINIO / ALUMINUM	2,5	2+2			≤ 44	WL7	TDB3	DSL0	PL0	PASSA / PASS	PASSA / PASS
TARGA / RECTANGLE	60X40	ALLUMINIO / ALUMINUM	2,5		2		≤ 44	WL7	TDB3	DSL0	PL0	PASSA / PASS	PASSA / PASS
TARGA / RECTANGLE	100X40	ALLUMINIO / ALUMINUM	2,5		2		≤ 60	WL7	TDB3	DSL0	PL0	PASSA / PASS	PASSA / PASS
TARGA / RECTANGLE	120X40	ALLUMINIO / ALUMINUM	2,5		2		≤ 90	WL7	TDB4	DSL0	PL0	PASSA / PASS	PASSA / PASS
TARGA / RECTANGLE	130X40	ALLUMINIO / ALUMINUM	2,5		2		≤ 90	WL7	TDB4	DSL0	PL0	PASSA / PASS	PASSA / PASS
TARGA / RECTANGLE	135X40	ALLUMINIO / ALUMINUM	2,5		2		≤ 90	WL7	TDB4	DSL0	PL0	PASSA / PASS	PASSA / PASS
TARGA / RECTANGLE	150X40	ALLUMINIO / ALUMINUM	2,5		2		≤ 90	WL7	TDB4	DSL0	PL0	PASSA / PASS	PASSA / PASS
TARGA / RECTANGLE	180X40	ALLUMINIO / ALUMINUM	2,5		2		≤ 90	WL7	TDB4	DSL0	PL0	PASSA / PASS	PASSA / PASS
TARGA / RECTANGLE	200X40	ALLUMINIO / ALUMINUM	2,5		2		≤ 90	WL7	TDB4	DSL0	PL0	PASSA / PASS	PASSA / PASS
TARGA / RECTANGLE	250X40	ALLUMINIO / ALUMINUM	2,5		2		≤ 90	WL7	TDB4	DSL0	PL0	PASSA / PASS	PASSA / PASS
TARGA / RECTANGLE	300X40	ALLUMINIO / ALUMINUM	2,5		2		≤ 90	WL7	TDB4	DSL0	PL0	PASSA / PASS	PASSA / PASS
TARGA / RECTANGLE	25X45	ALLUMINIO / ALUMINUM	2,5	2			≤ 44	WL7	TDB3	DSL0	PL0	PASSA / PASS	PASSA / PASS
TARGA / RECTANGLE	130X45	ALLUMINIO / ALUMINUM	2,5		2		< 90	WL7	TDB4	DSL0	PL0	PASSA / PASS	PASSA / PASS
TARGA / RECTANGLE	25X50	ALLUMINIO / ALUMINUM	2,5	2			≤ 44	WL7	TDB3	DSL0	PL0	PASSA / PASS	PASSA / PASS
TARGA / RECTANGLE	50X50	ALLUMINIO / ALUMINUM	2,5	2			≤ 44	WL7	TDB3	DSL0	PL0	PASSA / PASS	PASSA / PASS
TARGA DOPPIA BASE / DOUBLE BASE RECTANGLE	70X50	ALLUMINIO / ALUMINUM	2,5	2	2		≤ 90	WL7	TDB3	DSL0	PL0	PASSA / PASS	PASSA / PASS
TARGA / RECTANGLE	100X50	ALLUMINIO / ALUMINUM	2,5		2		≤ 90	WL7	TDB3	DSL0	PL0	PASSA / PASS	PASSA / PASS
TARGA / RECTANGLE	120X50	ALLUMINIO / ALUMINUM	2,5		2		≤ 90	WL7	TDB4	DSL0	PL0	PASSA / PASS	PASSA / PASS
TARGA / RECTANGLE	125X50	ALLUMINIO / ALUMINUM	2,5		2		≤ 90	WL7	TDB4	DSL0	PL0	PASSA / PASS	PASSA / PASS
TARGA / RECTANGLE	150X50	ALLUMINIO / ALUMINUM	2,5		2		≤ 90	WL7	TDB4	DSL0	PL0	PASSA / PASS	PASSA / PASS
TARGA / RECTANGLE	160X50	ALLUMINIO / ALUMINUM	2,5		2		≤ 90	WL7	TDB4	DSL0	PL0	PASSA / PASS	PASSA / PASS
TARGA / RECTANGLE	180X50	ALLUMINIO / ALUMINUM	2,5		2		≤ 90	WL7	TDB4	DSL0	PL0	PASSA / PASS	PASSA / PASS
TARGA / RECTANGLE	200X50	ALLUMINIO / ALUMINUM	2,5		2		≤ 90	WL7	TDB4	DSL0	PL0	PASSA / PASS	PASSA / PASS
TARGA / RECTANGLE	250X50	ALLUMINIO / ALUMINUM	2,5			2	≤ 90	WL7	TDB4	DSL0	PL0	PASSA / PASS	PASSA / PASS
TARGA / RECTANGLE	300X50	ALLUMINIO / ALUMINUM	2,5			2	≤ 90	WL7	TDB4	DSL0	PL0	PASSA / PASS	PASSA / PASS
TARGA / RECTANGLE	53X53	ALLUMINIO / ALUMINUM	2,5	2			≤ 44	WL7	TDB3	DSL0	PL0	PASSA / PASS	PASSA / PASS
TARGA DOPPIA BASE / DOUBLE BASE RECTANGLE	60X60	ALLUMINIO / ALUMINUM	2,5	2+2			44	WL7	TDB3	DSL0	PL0	PASSA / PASS	PASSA / PASS
TARGA / RECTANGLE	60X60	ALLUMINIO / ALUMINUM	2,5	2			44	WL7	TDB3	DSL0	PL0	PASSA / PASS	PASSA / PASS
TARGA / RECTANGLE	65X60	ALLUMINIO / ALUMINUM	2,5	2			44	WL7	TDB3	DSL0	PL0	PASSA / PASS	PASSA / PASS
ROMBO / DIAMOND	80	ALLUMINIO / ALUMINUM	2,5	2			44	WL7	TDB4	DSL0	PL0	PASSA / PASS	PASSA / PASS
TARGA / RECTANGLE	80X60	ALLUMINIO / ALUMINUM	2,5	2			44	WL7	TDB3	DSL0	PL0	PASSA / PASS	PASSA / PASS
TARGA / RECTANGLE	80X60	ALLUMINIO / ALUMINUM	2,5		2		44	WL7	TDB3	DSL0	PL0	PASSA / PASS	PASSA / PASS
TARGA DOPPIA BASE (BASE 60) / DOUBLE BASE RECTANGLE (BASE 90)	90X60	ALLUMINIO / ALUMINUM	2,5	2+2			44	WL7	TDB3	DSL0	PL0	PASSA / PASS	PASSA / PASS
TARGA DOPPIA BASE (BASE 60) / DOUBLE BASE RECTANGLE (BASE 60)	90X60	ALLUMINIO / ALUMINUM	2,5	2+2			≤ 44	WL7	TDB4	DSL0	PL0	PASSA / PASS	PASSA / PASS
TARGA / RECTANGLE	90X60	ALLUMINIO / ALUMINUM	2,5	2	2		≤ 50	WL7	TDB4	DSL0	PL0	PASSA / PASS	PASSA / PASS

TIPOLOGIA / TYPOLOGY	DIMENSIONI (CM) / DIMENSIONS (CM)	MATERIALE / MATERIAL	SPESSORE (MM) / THICKNESS (MM)	SISTEMA AGGANCIO / FIXING SYSTEM					RESISTENZA AI CARICHI ORIZZONTALI */ RESISTANCE TO HORIZONTAL LOADS					
				N. ATTACCHI / NO. CLAMPS	N. RINFORZI CORSOIO NORMALE / NO. NORMAL SLIDER REINFORCEMENTS	N. RINFORZI CORSOIO TRIVERSE / NO. ROD SLIDER REINFORCEMENTS	INTERASSE MAX DI CALCOLO ATTACCHI / MAXIMUM DISTANCE CALCULATION CLAMPS	AZIONE DEL VENTO / WIND ACTION	DEFORMAZIONE TEMPORANEA FLETTENTE / TEMPORARY DEFLECTION BENDING	CARICO DINAMICO DA INNEVAMENTO DI NEVE / DYNAMIC SNOW LOAD	CARICHI CONCENTRATI / POINTS LOADS	DEFORMAZIONE PERMANENTE / PERMANENT DEFLECTION	FRIGORI / FROMS
TARGA / RECTANGLE	100X60	ALLUMINIO / ALUMINIUM	2,5		2		≤ 90	WL7	TDB3	DSL0	PL0	PASSA / PASS	PASSA / PASS
TARGA / RECTANGLE	120X60	ALLUMINIO / ALUMINIUM	2,5		2		≤ 90	WL7	TDB4	DSL0	PL0	PASSA / PASS	PASSA / PASS
TARGA / RECTANGLE	130X60	ALLUMINIO / ALUMINIUM	2,5		2		≤ 90	WL7	TDB4	DSL0	PL0	PASSA / PASS	PASSA / PASS
TARGA / RECTANGLE	150X60	ALLUMINIO / ALUMINIUM	2,5		2		≤ 90	WL7	TDB4	DSL0	PL0	PASSA / PASS	PASSA / PASS
TARGA / RECTANGLE	180X60	ALLUMINIO / ALUMINIUM	2,5		2		≤ 90	WL7	TDB4	DSL0	PL0	PASSA / PASS	PASSA / PASS
TARGA / RECTANGLE	200X60	ALLUMINIO / ALUMINIUM	2,5		2		≤ 90	WL7	TDB4	DSL0	PL0	PASSA / PASS	PASSA / PASS
TARGA / RECTANGLE	240X60	ALLUMINIO / ALUMINIUM	2,5		2		≤ 90	WL7	TDB4	DSL0	PL0	PASSA / PASS	PASSA / PASS
TARGA / RECTANGLE	70X70	ALLUMINIO / ALUMINIUM	2,5		2		≤ 90	WL7	TDB4	DSL0	PL0	PASSA / PASS	PASSA / PASS
TARGA / RECTANGLE	100X70	ALLUMINIO / ALUMINIUM	2,5		2		≤ 90	WL7	TDB4	DSL0	PL0	PASSA / PASS	PASSA / PASS
TARGA / RECTANGLE	120X70	ALLUMINIO / ALUMINIUM	2,5		2		≤ 90	WL7	TDB3	DSL0	PL0	PASSA / PASS	PASSA / PASS
TARGA / RECTANGLE	130X70	ALLUMINIO / ALUMINIUM	2,5		2		≤ 90	WL7	TDB4	DSL0	PL0	PASSA / PASS	PASSA / PASS
TARGA / RECTANGLE	150X70	ALLUMINIO / ALUMINIUM	2,5		2		≤ 90	WL7	TDB4	DSL0	PL0	PASSA / PASS	PASSA / PASS
TARGA / RECTANGLE	170X70	ALLUMINIO / ALUMINIUM	2,5		2		≤ 90	WL7	TDB4	DSL0	PL0	PASSA / PASS	PASSA / PASS
TARGA / RECTANGLE	180X70	ALLUMINIO / ALUMINIUM	2,5		2		≤ 90	WL7	TDB4	DSL0	PL0	PASSA / PASS	PASSA / PASS
TARGA / RECTANGLE	200X70	ALLUMINIO / ALUMINIUM	2,5		2		≤ 90	WL7	TDB4	DSL0	PL0	PASSA / PASS	PASSA / PASS
TARGA / RECTANGLE	235X70	ALLUMINIO / ALUMINIUM	2,5		2		≤ 90	WL7	TDB4	DSL0	PL0	PASSA / PASS	PASSA / PASS
TARGA / RECTANGLE	250X70	ALLUMINIO / ALUMINIUM	2,5		2		≤ 90	WL7	TDB4	DSL0	PL0	PASSA / PASS	PASSA / PASS
TARGA / RECTANGLE	300X70	ALLUMINIO / ALUMINIUM	2,5		2		≤ 90	WL7	TDB4	DSL0	PL0	PASSA / PASS	PASSA / PASS
TARGA / RECTANGLE	30X75	ALLUMINIO / ALUMINIUM	2,5	2			≤ 60	WL7	TDB4	DSL0	PL0	PASSA / PASS	PASSA / PASS
TARGA / RECTANGLE	50X75	ALLUMINIO / ALUMINIUM	2,5	2			≤ 60	WL7	TDB4	DSL0	PL0	PASSA / PASS	PASSA / PASS
TARGA / RECTANGLE	100X75	ALLUMINIO / ALUMINIUM	2,5		2		≤ 60	WL7	TDB3	DSL0	PL0	PASSA / PASS	PASSA / PASS
TARGA / RECTANGLE	105X75	ALLUMINIO / ALUMINIUM	2,5		2		≤ 60	WL7	TDB3	DSL0	PL0	PASSA / PASS	PASSA / PASS
TARGA / RECTANGLE	125X75	ALLUMINIO / ALUMINIUM	2,5		2		≤ 60	WL7	TDB4	DSL0	PL0	PASSA / PASS	PASSA / PASS
TARGA / RECTANGLE	200X80	ALLUMINIO / ALUMINIUM	2,5	2			≤ 60	WL7	TDB4	DSL0	PL0	PASSA / PASS	PASSA / PASS
TARGA / RECTANGLE	270X80	ALLUMINIO / ALUMINIUM	2,5	2			≤ 60	WL7	TDB4	DSL0	PL0	PASSA / PASS	PASSA / PASS
TARGA / RECTANGLE	40X90	ALLUMINIO / ALUMINIUM	2,5		2		≤ 60	WL7	TDB4	DSL0	PL0	PASSA / PASS	PASSA / PASS
TARGA / RECTANGLE	40X90	ALLUMINIO / ALUMINIUM	2,5	2			≤ 60	WL7	TDB4	DSL0	PL0	PASSA / PASS	PASSA / PASS
ROMBO / DIAMOND	90	ALLUMINIO / ALUMINIUM	2,5		2		≤ 60	WL7	TDB2	DSL0	PL0	PASSA / PASS	PASSA / PASS
TARGA / RECTANGLE	90X90	ALLUMINIO / ALUMINIUM	2,5		2		≤ 90	WL7	TDB4	DSL0	PL0	PASSA / PASS	PASSA / PASS
TARGA / RECTANGLE	120X90	ALLUMINIO / ALUMINIUM	2,5		2		≤ 90	WL7	TDB4	DSL0	PL0	PASSA / PASS	PASSA / PASS
TARGA DOPPIA BASE / DOUBLE BASE RECTANGLE	120X90	ALLUMINIO / ALUMINIUM	2,5		2+2		≤ 90	WL7	TDB4	DSL0	PL0	PASSA / PASS	PASSA / PASS
TARGA / RECTANGLE	135X90	ALLUMINIO / ALUMINIUM	2,5		2		≤ 90	WL7	TDB4	DSL0	PL0	PASSA / PASS	PASSA / PASS
TARGA DOPPIA BASE / DOUBLE BASE RECTANGLE	135X90	ALLUMINIO / ALUMINIUM	2,5		2+2		≤ 90	WL7	TDB4	DSL0	PL0	PASSA / PASS	PASSA / PASS
TARGA / RECTANGLE	90X90	ALLUMINIO / ALUMINIUM	2,5	2			≤ 60	WL7	TDB4	DSL0	PL0	PASSA / PASS	PASSA / PASS
TARGA / RECTANGLE	60X90	ALLUMINIO / ALUMINIUM	2,5		2		≤ 60	WL7	TDB4	DSL0	PL0	PASSA / PASS	PASSA / PASS
TARGA / RECTANGLE	200X90	ALLUMINIO / ALUMINIUM	2,5		2		≤ 90	WL7	TDB4	DSL0	PL0	PASSA / PASS	PASSA / PASS
TARGA IN 2 PEZZI / RECTANGLE IN 2 PIECES	350X90	ALLUMINIO / ALUMINIUM	2,5		2		≤ 90	WL7	TDB4	DSL0	PL0	PASSA / PASS	PASSA / PASS
TARGA / RECTANGLE	20X100	ALLUMINIO / ALUMINIUM	2,5	2			≤ 60	WL7	TDB2	DSL0	PL0	PASSA / PASS	PASSA / PASS
TARGA / RECTANGLE	25X100	ALLUMINIO / ALUMINIUM	2,5	2			≤ 60	WL7	TDB2	DSL0	PL0	PASSA / PASS	PASSA / PASS
TARGA / RECTANGLE	30X100	ALLUMINIO / ALUMINIUM	2,5	2			≤ 60	WL7	TDB2	DSL0	PL0	PASSA / PASS	PASSA / PASS
TARGA / RECTANGLE	100X100	ALLUMINIO / ALUMINIUM	2,5		2		≤ 90	WL7	TDB3	DSL0	PL0	PASSA / PASS	PASSA / PASS
TARGA / RECTANGLE	120X100	ALLUMINIO / ALUMINIUM	2,5		2		≤ 90	WL7	TDB4	DSL0	PL0	PASSA / PASS	PASSA / PASS
TARGA / RECTANGLE	125X100	ALLUMINIO / ALUMINIUM	2,5		2		≤ 90	WL7	TDB4	DSL0	PL0	PASSA / PASS	PASSA / PASS
TARGA / RECTANGLE	130X100	ALLUMINIO / ALUMINIUM	2,5		2		≤ 90	WL7	TDB4	DSL0	PL0	PASSA / PASS	PASSA / PASS
TARGA / RECTANGLE	150X100	ALLUMINIO / ALUMINIUM	2,5		2		≤ 90	WL7	TDB4	DSL0	PL0	PASSA / PASS	PASSA / PASS
TARGA DOPPIA BASE / DOUBLE BASE RECTANGLE	160X100	ALLUMINIO / ALUMINIUM	2,5		2+2		≤ 90	WL7	TDB4	DSL0	PL0	PASSA / PASS	PASSA / PASS
TARGA / RECTANGLE	180X100	ALLUMINIO / ALUMINIUM	2,5		2		≤ 90	WL7	TDB4	DSL0	PL0	PASSA / PASS	PASSA / PASS
TARGA / RECTANGLE	200X100	ALLUMINIO / ALUMINIUM	2,5		2		≤ 90	WL7	TDB4	DSL0	PL0	PASSA / PASS	PASSA / PASS
TARGA DOPPIA BASE / DOUBLE BASE RECTANGLE	200X100	ALLUMINIO / ALUMINIUM	2,5		2+3		≤ 110 / 70	WL7	TDB4	DSL0	PL0	PASSA / PASS	PASSA / PASS
TARGA / RECTANGLE	250X100	ALLUMINIO / ALUMINIUM	2,5		2		≤ 90	WL7	TDB4	DSL0	PL0	PASSA / PASS	PASSA / PASS
TARGA / RECTANGLE	300X100	ALLUMINIO / ALUMINIUM	2,5		2		≤ 90	WL7	TDB4	DSL0	PL0	PASSA / PASS	PASSA / PASS
TARGA / RECTANGLE	70X105	ALLUMINIO / ALUMINIUM	2,5		2		≤ 60	WL7	TDB3	DSL0	PL0	PASSA / PASS	PASSA / PASS
TARGA / RECTANGLE	105X105	ALLUMINIO / ALUMINIUM	2,5		2		≤ 60	WL7	TDB3	DSL0	PL0	PASSA / PASS	PASSA / PASS
TARGA / RECTANGLE	80X120	ALLUMINIO / ALUMINIUM	2,5		2		≤ 90	WL7	TDB4	DSL0	PL0	PASSA / PASS	PASSA / PASS
TARGA / RECTANGLE	90X120	ALLUMINIO / ALUMINIUM	2,5		2		≤ 90	WL7	TDB4	DSL0	PL0	PASSA / PASS	PASSA / PASS
TARGA / RECTANGLE	120X120	ALLUMINIO / ALUMINIUM	2,5		2		≤ 90	WL7	TDB4	DSL0	PL0	PASSA / PASS	PASSA / PASS
TARGA / RECTANGLE	150X120	ALLUMINIO / ALUMINIUM	2,5		2		≤ 90	WL7	TDB4	DSL0	PL0	PASSA / PASS	PASSA / PASS
TARGA / RECTANGLE	160X120	ALLUMINIO / ALUMINIUM	2,5		2		≤ 90	WL7	TDB4	DSL0	PL0	PASSA / PASS	PASSA / PASS
TARGA / RECTANGLE	200X120	ALLUMINIO / ALUMINIUM	2,5		2		≤ 90	WL7	TDB4	DSL0	PL0	PASSA / PASS	PASSA / PASS
TARGA / RECTANGLE	250X120	ALLUMINIO / ALUMINIUM	2,5		2		≤ 90	WL7	TDB4	DSL0	PL0	PASSA / PASS	PASSA / PASS
TARGA / RECTANGLE	300X120	ALLUMINIO / ALUMINIUM	2,5		2		≤ 90	WL7	TDB4	DSL0	PL0	PASSA / PASS	PASSA / PASS
TARGA / RECTANGLE	125X125	ALLUMINIO / ALUMINIUM	2,5		2		≤ 90	WL7	TDB4	DSL0	PL0	PASSA / PASS	PASSA / PASS
TARGA / RECTANGLE	150X125	ALLUMINIO / ALUMINIUM	2,5		2		≤ 90	WL7	TDB4	DSL0	PL0	PASSA / PASS	PASSA / PASS

TIPOLOGIA / TYPOLOGY	DIMENSIONI (CM) / DIMENSIONS (CM)	MATERIALE / MATERIAL	SPESSORE (MM) / THICKNESS (MM)	SISTEMA AGGANCIO / FIXING SYSTEM: N. ATTACCHI / NO. CLAMPS	N. RINFORZI CORRENTI NORMALI / NO. NORMAL SLIDER REINFORCEMENTS	N. RINFORZI CORRENTI TRAVERSE / NO. ROD SLIDER REINFORCEMENTS	INTERASSE MAX DI CALCOLO ATTACCHI / MAXIMUM DISTANCE CALCULATION CLAMPS	RESISTENZA AI CARICHI ORIZZONTALI */ RESISTANCE TO HORIZONTAL LOADS: AZIONE DEL VENTO / WIND ACTION	DEFORMAZIONE TEMPORANEA PIETTENTE / TEMPORARY DEFLECTION BENDING	CARICO DINAMICO DA RIMOZIONE DI NEVE / DYNAMIC SNOW LOAD	CARICHI CONCENTRATI / POINTS LOADS	DEFORMAZIONE PERMANENTE / PERMANENT DEFLECTION	CEDIMENTI / FORCES
TARGA / RECTANGLE	180X125	ALLUMINIO / ALUMINIUM	2,5		2		≤ 90	WL7	TDB4	DSL0	PL0	PASSA / PASS	PASSA / PASS
TARGA / RECTANGLE	200X125	ALLUMINIO / ALUMINIUM	2,5		2		≤ 90	WL7	TDB4	DSL0	PL0	PASSA / PASS	PASSA / PASS
TARGA / RECTANGLE	35X135	ALLUMINIO / ALUMINIUM	2,5	3			≤ 90	WL7	TDB4	DSL0	PL0	PASSA / PASS	PASSA / PASS
TARGA / RECTANGLE	80X135	ALLUMINIO / ALUMINIUM	2,5		2		≤ 90	WL7	TDB4	DSL0	PL0	PASSA / PASS	PASSA / PASS
TARGA / RECTANGLE	135X135	ALLUMINIO / ALUMINIUM	2,5		2		≤ 90	WL7	TDB4	DSL0	PL0	PASSA / PASS	PASSA / PASS
TARGA / RECTANGLE	150X135	ALLUMINIO / ALUMINIUM	2,5		2		≤ 90	WL7	TDB4	DSL0	PL0	PASSA / PASS	PASSA / PASS
TARGA / RECTANGLE	200X135	ALLUMINIO / ALUMINIUM	2,5		2		≤ 90	WL7	TDB4	DSL0	PL0	PASSA / PASS	PASSA / PASS
TARGA DOPPIA BASE / DOUBLE BASE RECTANGLE	200X135	ALLUMINIO / ALUMINIUM	2,5		2+3		≤ 110 / 70	WL7	TDB4	DSL0	PL0	PASSA / PASS	PASSA / PASS
TARGA / RECTANGLE	180X150	ALLUMINIO / ALUMINIUM	2,5		3		≤ 90	WL7	TDB4	DSL0	PL0	PASSA / PASS	PASSA / PASS
TARGA / RECTANGLE	130X150	ALLUMINIO / ALUMINIUM	2,5		3		≤ 90	WL7	TDB4	DSL0	PL0	PASSA / PASS	PASSA / PASS
TARGA / RECTANGLE	150X150	ALLUMINIO / ALUMINIUM	2,5		3		≤ 90	WL7	TDB4	DSL0	PL0	PASSA / PASS	PASSA / PASS
TARGA / RECTANGLE	180X150	ALLUMINIO / ALUMINIUM	2,5		3		≤ 90	WL7	TDB4	DSL0	PL0	PASSA / PASS	PASSA / PASS
TARGA / RECTANGLE	200X150	ALLUMINIO / ALUMINIUM	2,5		3		≤ 90	WL7	TDB4	DSL0	PL0	PASSA / PASS	PASSA / PASS
TARGA DOPPIA BASE / DOUBLE BASE RECTANGLE	200X150	ALLUMINIO / ALUMINIUM	2,5		2+3		≤ 110 / 70	WL7	TDB4	DSL0	PL0	PASSA / PASS	PASSA / PASS
TARGA / RECTANGLE	250X150	ALLUMINIO / ALUMINIUM	2,5		3		≤ 90	WL7	TDB4	DSL0	PL0	PASSA / PASS	PASSA / PASS
TARGA / RECTANGLE	300X150	ALLUMINIO / ALUMINIUM	2,5			3	≤ 90	WL7	TDB4	DSL0	PL0	PASSA / PASS	PASSA / PASS
TARGA / RECTANGLE	100X180	ALLUMINIO / ALUMINIUM	2,5		3		≤ 92,5	WL7	TDB5	DSL0	PL0	PASSA / PASS	PASSA / PASS
TARGA / RECTANGLE	90X180	ALLUMINIO / ALUMINIUM	2,5		3		≤ 92,5	WL7	TDB5	DSL0	PL0	PASSA / PASS	PASSA / PASS
TARGA / RECTANGLE	130X180	ALLUMINIO / ALUMINIUM	2,5		3		≤ 92,5	WL7	TDB5	DSL0	PL0	PASSA / PASS	PASSA / PASS
TARGA / RECTANGLE	200X180	ALLUMINIO / ALUMINIUM	2,5		3		≤ 92,5	WL7	TDB5	DSL0	PL0	PASSA / PASS	PASSA / PASS
TARGA / RECTANGLE	100X180	ALLUMINIO / ALUMINIUM	2,5		3		≤ 92,5	WL7	TDB5	DSL0	PL0	PASSA / PASS	PASSA / PASS
TARGA IN 2 PEZZI / RECTANGLE IN 2 PIECES	270X180	ALLUMINIO / ALUMINIUM	2,5			2+2	≤ 90	WL7	TDB4	DSL0	PL0	PASSA / PASS	PASSA / PASS
TARGA / RECTANGLE	130X190	ALLUMINIO / ALUMINIUM	2,5		3		≤ 92,5	WL7	TDB5	DSL0	PL0	PASSA / PASS	PASSA / PASS
TARGA / RECTANGLE	100X200	ALLUMINIO / ALUMINIUM	2,5		3		≤ 92,5	WL7	TDB5	DSL0	PL0	PASSA / PASS	PASSA / PASS
TARGA / RECTANGLE	135X200	ALLUMINIO / ALUMINIUM	2,5		3		≤ 92,5	WL7	TDB5	DSL0	PL0	PASSA / PASS	PASSA / PASS
TARGA / RECTANGLE	150X200	ALLUMINIO / ALUMINIUM	2,5		3		≤ 92,5	WL7	TDB5	DSL0	PL0	PASSA / PASS	PASSA / PASS
TARGA IN 2 PEZZI / RECTANGLE IN 2 PIECES	200X200	ALLUMINIO / ALUMINIUM	2,5			2+2	≤ 90	WL7	TDB4	DSL0	PL0	PASSA / PASS	PASSA / PASS
TARGA IN 2 PEZZI / RECTANGLE IN 2 PIECES	250X200	ALLUMINIO / ALUMINIUM	2,5			2+2	≤ 90	WL7	TDB4	DSL0	PL0	PASSA / PASS	PASSA / PASS
TARGA IN 2 PEZZI / RECTANGLE IN 2 PIECES	270X200	ALLUMINIO / ALUMINIUM	2,5			2+2	≤ 90	WL7	TDB4	DSL0	PL0	PASSA / PASS	PASSA / PASS
TARGA IN 2 PEZZI / RECTANGLE IN 2 PIECES	300X200	ALLUMINIO / ALUMINIUM	2,5			2+2	≤ 90	WL7	TDB4	DSL0	PL0	PASSA / PASS	PASSA / PASS
TARGA / RECTANGLE	80X220	ALLUMINIO / ALUMINIUM	2,5		3		≤ 92,5	WL7	TDB5	DSL0	PL0	PASSA / PASS	PASSA / PASS
TARGA / RECTANGLE	120X220	ALLUMINIO / ALUMINIUM	2,5		3		≤ 92,5	WL7	TDB5	DSL0	PL0	PASSA / PASS	PASSA / PASS
TARGA IN 2 PEZZI / RECTANGLE IN 2 PIECES	170X220	ALLUMINIO / ALUMINIUM	2,5		2+2		≤ 90	WL7	TDB4	DSL0	PL0	PASSA / PASS	PASSA / PASS
TARGA IN 2 PEZZI / RECTANGLE IN 2 PIECES	300X220	ALLUMINIO / ALUMINIUM	2,5			2+2	≤ 90	WL7	TDB4	DSL0	PL0	PASSA / PASS	PASSA / PASS
TARGA / RECTANGLE	90X250	ALLUMINIO / ALUMINIUM	2,5		4		≤ 90	WL7	TDB4	DSL0	PL0	PASSA / PASS	PASSA / PASS
TARGA / RECTANGLE	180X250	ALLUMINIO / ALUMINIUM	2,5		4		≤ 90	WL7	TDB4	DSL0	PL0	PASSA / PASS	PASSA / PASS
TARGA IN 2 PEZZI / RECTANGLE IN 2 PIECES	270X250	ALLUMINIO / ALUMINIUM	2,5			2+2	≤ 90	WL7	TDB4	DSL0	PL0	PASSA / PASS	PASSA / PASS
TARGA IN 2 PEZZI / RECTANGLE IN 2 PIECES	290X250	ALLUMINIO / ALUMINIUM	2,5			2+2	≤ 90	WL7	TDB4	DSL0	PL0	PASSA / PASS	PASSA / PASS
TARGA IN 2 PEZZI / RECTANGLE IN 2 PIECES	300X250	ALLUMINIO / ALUMINIUM	2,5			2+2	≤ 90	WL7	TDB4	DSL0	PL0	PASSA / PASS	PASSA / PASS
TARGA IN 2 PEZZI / RECTANGLE IN 2 PIECES	400X250	ALLUMINIO / ALUMINIUM	2,5			4	≤ 90	WL7	TDB4	DSL0	PL0	PASSA / PASS	PASSA / PASS
TARGA / RECTANGLE	130X270	ALLUMINIO / ALUMINIUM	2,5			4	≤ 90	WL7	TDB4	DSL0	PL0	PASSA / PASS	PASSA / PASS
TARGA / RECTANGLE	120X300	ALLUMINIO / ALUMINIUM	2,5			4	≤ 90	WL7	TDB4	DSL0	PL0	PASSA / PASS	PASSA / PASS
TARGA / RECTANGLE	150X300	ALLUMINIO / ALUMINIUM	2,5			4	≤ 90	WL7	TDB4	DSL0	PL0	PASSA / PASS	PASSA / PASS
TARGA IN 2 PEZZI / RECTANGLE IN 2 PIECES	170X300	ALLUMINIO / ALUMINIUM	2,5			2+2	≤ 90	WL7	TDB4	DSL0	PL0	PASSA / PASS	PASSA / PASS
TARGA IN 2 PEZZI / RECTANGLE IN 2 PIECES	200X300	ALLUMINIO / ALUMINIUM	2,5			2+2	≤ 90	WL7	TDB4	DSL0	PL0	PASSA / PASS	PASSA / PASS
TARGA IN 2 PEZZI / RECTANGLE IN 2 PIECES	225X300	ALLUMINIO / ALUMINIUM	2,5			3+3	≤ 90	WL7	TDB4	DSL0	PL0	PASSA / PASS	PASSA / PASS
TARGA IN 2 PEZZI / RECTANGLE IN 2 PIECES	250X300	ALLUMINIO / ALUMINIUM	2,5			3+3	≤ 90	WL7	TDB4	DSL0	PL0	PASSA / PASS	PASSA / PASS
TARGA IN 2 PEZZI / RECTANGLE IN 2 PIECES	275X300	ALLUMINIO / ALUMINIUM	2,5			3+3	≤ 90	WL7	TDB4	DSL0	PL0	PASSA / PASS	PASSA / PASS
TARGA IN 2 PEZZI / RECTANGLE IN 2 PIECES	300X300	ALLUMINIO / ALUMINIUM	2,5			3+3	≤ 90	WL7	TDB4	DSL0	PL0	PASSA / PASS	PASSA / PASS
TARGA IN 3 PEZZI / RECTANGLE IN 3 PIECES	300X350	ALLUMINIO / ALUMINIUM	2,5			2+2+2	≤ 90	WL7	TDB4	DSL0	PL0	PASSA / PASS	PASSA / PASS
TARGA IN 3 PEZZI / RECTANGLE IN 3 PIECES	300X400	ALLUMINIO / ALUMINIUM	2,5			2+2+2	≤ 90	WL7	TDB4	DSL0	PL0	PASSA / PASS	PASSA / PASS
CROCI S. ANDREA NORMALE / NORMAL CROSSBUCK	-	ALLUMINIO / ALUMINIUM	2,5	4			-	WL7	TDB3	DSL0	PL0	PASSA / PASS	PASSA / PASS
CROCI S. ANDREA DOPPIA / DOUBLE CROSSBUCK	-	ALLUMINIO / ALUMINIUM	2,5	4			-	WL7	TDB3	DSL0	PL0	PASSA / PASS	PASSA / PASS

TIPOLOGIA / TYPOLOGY	DIMENSIONI (CM) / DIMENSIONS (CM)	MATERIALE / MATERIAL	SPESSORE (MM) / THICKNESS (MM)	SISTEMA AGGANCIO / FIXING SYSTEM: N. ATTACCHI / NO. CLAMPS	N. RINFORZI CORRIDO NORMALE / NO. NORMAL-SLIDER REINFORCEMENTS	N. RINFORZI CORRIDO TRAVERSE / NO. ROD SLIDER REINFORCEMENTS	INTERASSE MAX DI CALCOLO ATTACCHI / MAXIMUM DISTANCE CALCULATION CLAMPS	RESISTENZA AI CARICHI ORIZZONTALI */ RESISTANCE TO HORIZONTAL LOADS: AZIONE DEL VENTO / WIND ACTION	DEFORMAZIONE TEMPORANEA FLETTENTE / TEMPORARY DEFLECTION BENDING	CARICO DINAMICO DA RIMOZIONE DI NEVE / DYNAMIC SNOW LOAD	CARICHI CONCENTRATI / POINTS LOADS	DEFORMAZIONE PERMANENTE / PERMANENT DEFLECTION	FILLARI / POINGS
TARGA FUORI STANDARD / NO STANDARD RECTANGLE	< 3 MQ	ALLUMINIO / ALUMINUM	2,6		ADEGUATI / APPROPRIATE		≤ 90	WL7	TDB4	DSL0	PL0	PASSA / PASS	PASSA / PASS
TARGA FUORI STANDARD / NO STANDARD RECTANGLE	> 3 MQ	ALLUMINIO / ALUMINUM	2,6			ADEGUATI / APPROPRIATE	≤ 90	WL7	TDB4	DSL0	PL0	PASSA / PASS	PASSA / PASS
TARGA FUORI STANDARD / NO STANDARD RECTANGLE	≤ 3 MQ	ALLUMINIO / ALUMINUM	3		ADEGUATI / APPROPRIATE		≤ 90	WL7	TDB3/TDB4	DSL0	PL0	PASSA / PASS	PASSA / PASS
TARGA FUORI STANDARD / NO STANDARD RECTANGLE	> 3 MQ	ALLUMINIO / ALUMINUM	3			ADEGUATI / APPROPRIATE	≤ 94	WL7	TDB3/TDB4	DSL0	PL0	PASSA / PASS	PASSA / PASS

TIPOLOGIA / TYPOLOGY	DIMENSIONI (CM) / DIMENSIONS (CM)	MATERIALE / MATERIAL	SPESSORE (MM) / THICKNESS (MM)	SISTEMA AGGANCIO / FIXING SYSTEM: N. ATTACCHI / NO. CLAMPS	N. RINFORZI CORRIDO NORMALE / NO. NORMAL-SLIDER REINFORCEMENTS	N. RINFORZI CHIUSI / NO. CLOSED REINFORCEMENTS	N. GAVE / NO. NUMBER OF SPECIAL LONG ATTACKS	INTERASSE MAX DI CALCOLO ATTACCHI / MAXIMUM DISTANCE CALCULATION CLAMPS	RESISTENZA AI CARICHI ORIZZONTALI */ RESISTANCE TO HORIZONTAL LOADS: AZIONE DEL VENTO / WIND ACTION	DEFORMAZIONE TEMPORANEA FLETTENTE / TEMPORARY DEFLECTION BENDING	CARICO DINAMICO DA RIMOZIONE DI NEVE / DYNAMIC SNOW LOAD	CARICHI CONCENTRATI / POINTS LOADS	DEFORMAZIONE PERMANENTE / PERMANENT DEFLECTION	FILLARI / POINGS
TRIANGOLO / TRIANGLE **	60	ALLUMINIO / ALUMINUM	2,5	1		1	1	33	WL7	TDB1	DSL0	PL0	PASSA / PASS	PASSA / PASS
TRIANGOLO / TRIANGLE **	90	ALLUMINIO / ALUMINUM	2,5	1		1	1	44	WL7	TDB3	DSL0	PL0	PASSA / PASS	PASSA / PASS
TRIANGOLO / TRIANGLE **	120	ALLUMINIO / ALUMINUM	2,5			2	1	58	WL7	TDB2	DSL0	PL0	PASSA / PASS	PASSA / PASS
DISCO / CIRCLE **	40	ALLUMINIO / ALUMINUM	2,5	2				27	WL7	TDB3	DSL0	PL0	PASSA / PASS	PASSA / PASS
DISCO / CIRCLE **	60	ALLUMINIO / ALUMINUM	2,5			2	1	44	WL7	TDB3	DSL0	PL0	PASSA / PASS	PASSA / PASS
DISCO / CIRCLE **	90	ALLUMINIO / ALUMINUM	2,5			2	1	≤ 58	WL7	TDB4	DSL0	PL0	PASSA / PASS	PASSA / PASS
OTTAGONO / OCTAGON **	60	ALLUMINIO / ALUMINUM	2,5			2	1	≤ 58	WL7	TDB4	DSL0	PL0	PASSA / PASS	PASSA / PASS
OTTAGONO / OCTAGON **	90	ALLUMINIO / ALUMINUM	2,5			2	1	≤ 58	WL7	TDB4	DSL0	PL0	PASSA / PASS	PASSA / PASS
FRECCIA / ARROW **	130X30	ALLUMINIO / ALUMINUM	2,5		2			≤ 45	WL7	TDB4	DSL0	PL0	PASSA / PASS	PASSA / PASS
FRECCIA / ARROW **	150X40	ALLUMINIO / ALUMINUM	2,5		2			≤ 45	WL7	TDB4	DSL0	PL0	PASSA / PASS	PASSA / PASS
FRECCIA / ARROW **	170X50	ALLUMINIO / ALUMINUM	2,5		2			≤ 45	WL7	TDB4	DSL0	PL0	PASSA / PASS	PASSA / PASS
TARGA / RECTANGLE **	53X18	ALLUMINIO / ALUMINUM	2,5			2	1	-	WL7	TDB2	DSL0	PL0	PASSA / PASS	PASSA / PASS
TARGA / RECTANGLE **	48X23	ALLUMINIO / ALUMINUM	2,5			2	1	-	WL7	TDB3	DSL0	PL0	PASSA / PASS	PASSA / PASS
TARGA / RECTANGLE **	58X20	ALLUMINIO / ALUMINUM	2,5			2	1	-	WL7	TDB2	DSL0	PL0	PASSA / PASS	PASSA / PASS
TARGA / RECTANGLE **	100X20	ALLUMINIO / ALUMINUM	2,5		2			-	WL7	TDB2	DSL0	PL0	PASSA / PASS	PASSA / PASS
TARGA / RECTANGLE **	25X25	ALLUMINIO / ALUMINUM	2,5	2				-	WL7	TDB3	DSL0	PL0	PASSA / PASS	PASSA / PASS
TARGA / RECTANGLE **	50X25	ALLUMINIO / ALUMINUM	2,5			2	1	≤ 44	WL7	TDB3	DSL0	PL0	PASSA / PASS	PASSA / PASS
TARGA / RECTANGLE **	60X25	ALLUMINIO / ALUMINUM	2,5			2	1	≤ 16	WL7	TDB2	DSL0	PL0	PASSA / PASS	PASSA / PASS
TARGA / RECTANGLE **	100X25	ALLUMINIO / ALUMINUM	2,5		2			≤ 90	WL7	TDB4	DSL0	PL0	PASSA / PASS	PASSA / PASS
TARGA / RECTANGLE **	125X25	ALLUMINIO / ALUMINUM	2,5		2			≤ 90	WL7	TDB4	DSL0	PL0	PASSA / PASS	PASSA / PASS
TARGA / RECTANGLE **	50X27	ALLUMINIO / ALUMINUM	2,5			2	1	≤ 16	WL7	TDB2	DSL0	PL0	PASSA / PASS	PASSA / PASS
TARGA / RECTANGLE **	50X30	ALLUMINIO / ALUMINUM	2,5			2	1	≤ 44	WL7	TDB3	DSL0	PL0	PASSA / PASS	PASSA / PASS
TARGA / RECTANGLE **	60X30	ALLUMINIO / ALUMINUM	2,5			2	1	≤ 44	WL7	TDB3	DSL0	PL0	PASSA / PASS	PASSA / PASS
TARGA / RECTANGLE **	90X30	ALLUMINIO / ALUMINUM	2,5			2	1	≤ 90	WL7	TDB4	DSL0	PL0	PASSA / PASS	PASSA / PASS
TARGA / RECTANGLE **	125X30	ALLUMINIO / ALUMINUM	2,5		2			≤ 90	WL7	TDB4	DSL0	PL0	PASSA / PASS	PASSA / PASS
TARGA / RECTANGLE **	75X33	ALLUMINIO / ALUMINUM	2,5			2	1	≤ 58	WL7	TDB4	DSL0	PL0	PASSA / PASS	PASSA / PASS
TARGA / RECTANGLE **	16X35	ALLUMINIO / ALUMINUM	2,5	2				-	WL7	TDB3	DSL0	PL0	PASSA / PASS	PASSA / PASS
TARGA / RECTANGLE **	90X35	ALLUMINIO / ALUMINUM	2,5			2	1	≤ 90	WL7	TDB4	DSL0	PL0	PASSA / PASS	PASSA / PASS
TARGA / RECTANGLE **	105X35	ALLUMINIO / ALUMINUM	2,5			2	1	≤ 90	WL7	TDB4	DSL0	PL0	PASSA / PASS	PASSA / PASS
TARGA / RECTANGLE **	120X35	ALLUMINIO / ALUMINUM	2,5		2			≤ 90	WL7	TDB4	DSL0	PL0	PASSA / PASS	PASSA / PASS
TARGA / RECTANGLE **	40X40	ALLUMINIO / ALUMINUM	2,5			2	1	≤ 44	WL7	TDB3	DSL0	PL0	PASSA / PASS	PASSA / PASS
TARGA / RECTANGLE **	60X40	ALLUMINIO / ALUMINUM	2,5			2	1	≤ 44	WL7	TDB3	DSL0	PL0	PASSA / PASS	PASSA / PASS
TARGA / RECTANGLE **	25X45	ALLUMINIO / ALUMINUM	2,5	2				≤ 44	WL7	TDB3	DSL0	PL0	PASSA / PASS	PASSA / PASS
TARGA / RECTANGLE **	50X50	ALLUMINIO / ALUMINUM	2,5			2	1	≤ 44	WL7	TDB3	DSL0	PL0	PASSA / PASS	PASSA / PASS
TARGA / RECTANGLE **	40X60	ALLUMINIO / ALUMINUM	2,5			2	1	≤ 44	WL7	TDB3	DSL0	PL0	PASSA / PASS	PASSA / PASS
TARGA / RECTANGLE **	60X60	ALLUMINIO / ALUMINUM	2,5			2	1	≤ 44	WL7	TDB3	DSL0	PL0	PASSA / PASS	PASSA / PASS
ROMBO / DIAMOND **	60	ALLUMINIO / ALUMINUM	2,5			2	1	64	WL7	TDB4	DSL0	PL0	PASSA / PASS	PASSA / PASS
TARGA / RECTANGLE **	90X60	ALLUMINIO / ALUMINUM	2,5			2	1	≤ 90	WL7	TDB4	DSL0	PL0	PASSA / PASS	PASSA / PASS
TARGA / RECTANGLE **	240X60	ALLUMINIO / ALUMINUM	2,5		2			≤ 90	WL7	TDB4	DSL0	PL0	PASSA / PASS	PASSA / PASS
TARGA / RECTANGLE **	80X80	ALLUMINIO / ALUMINUM	2,5			2	1	≤ 86	WL7	TDB4	DSL0	PL0	PASSA / PASS	PASSA / PASS
TARGA / RECTANGLE **	80X90	ALLUMINIO / ALUMINUM	2,5			2	1	≤ 86	WL7	TDB4	DSL0	PL0	PASSA / PASS	PASSA / PASS
TARGA / RECTANGLE **	90X90	ALLUMINIO / ALUMINUM	2,5			2	1	≤ 65	WL7	TDB4	DSL0	PL0	PASSA / PASS	PASSA / PASS
TARGA / RECTANGLE **	90X90	ALLUMINIO / ALUMINUM	2,5		2			≤ 58	WL7	TDB4	DSL0	PL0	PASSA / PASS	PASSA / PASS
TARGA / RECTANGLE **	80X120	ALLUMINIO / ALUMINUM	2,5			2	1	≤ 90	WL7	TDB4	DSL0	PL0	PASSA / PASS	PASSA / PASS
TARGA / RECTANGLE **	80X120	ALLUMINIO / ALUMINUM	2,5			3	1	≤ 90	WL7	TDB4	DSL0	PL0	PASSA / PASS	PASSA / PASS
TARGA / RECTANGLE **	80X90	ALLUMINIO / ALUMINUM	3		3			≤ 58	WL7	TDB4	DSL0	PL0	PASSA / PASS	PASSA / PASS

* AZIONE DEL VENTO / WIND ACTION: FATTORE DI FORMA / SHAPE FACTOR = 1.2 ; COEFFICIENTE PARZIALE DI SICUREZZA / PARTIAL SAFETY FACTOR γ_F PAF2; COEFFICIENTE PARZIALE DEL MATERIALE / PARTIAL MATERIAL FACTOR γ_m ACCIAIO / STEEL = 1.05 , ALLUMINIO / ALUMINIUM = 1.15

** SEGNALI STRADALI PER PROVINCIA DI TRENTO-BOLZANO CARATTERIZZATI DA ATTACCHI SPECIALI LUNGHI (PER I DETTAGLI VEDERE DISEGNI COSTRUTTIVI)
STANDARD SIGNS FOR THE PROVINCE OF TRENTO-BOLZANO CHARACTERIZED BY LONG SPECIAL CLAMPS (FOR DETAILS SEE WORKING DRAWINGS)

SI PRECISA CHE AFFINCHÉ LA SEGNALETICA STRADALE VERTICALE PERMANENTE E/O I PANNELLI SEMILAVORATI DESTINATI ALLA MARCATURA CE, MANTENGA TUTTE LE CARATTERISTICHE PRESTAZIONALI ASSEGNATE, È NECESSARIO CHE SIA INSTALLATA CON LE STAFFE CERTIFICATE SOTTO RIPORTATE.

SI DECLINA PERTANTO OGNI RESPONSABILITÀ DERIVANTE DALL'INOSSERVANZA DI TALE PRESUPPOSTO FONDAMENTALE PER LA MARCATURA CE.

STAFFE CERTIFICATE

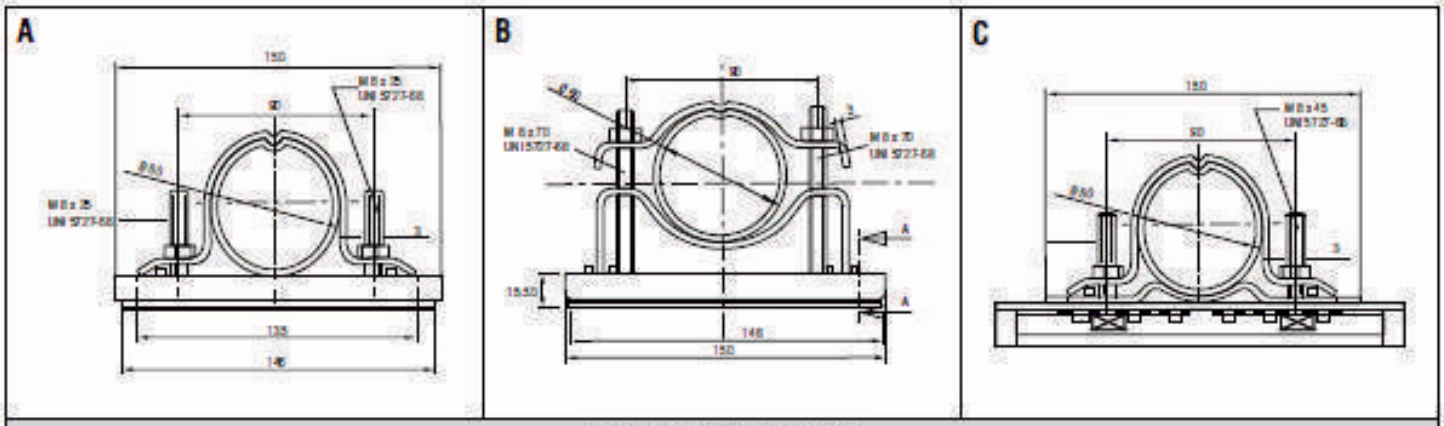

DISEGNI STAFFE CERTIFICATE

FIGURA	DISEGNO DI RIFERIMENTO	ARTICOLO
A	020 - 005 020 - 030	STAFFA A PONTE Ø 60 ANTIROTAZIONE + CANALINA IN ALLUMINIO + BULLONERIA 8x25 ZINCATA, PER SEGNALE "CE" CON ATTACCO STANDARD RETRO CARTELLO IN FERRO O ALLUMINIO
B	020 - 010 020 - 025	STAFFA A 3 PEZZI Ø 60 ANTIROTAZIONE COMPLETA DI CANALINA IN ALLUMINIO + BULLONERIA 8x70 ZINCATA, PER SEGNALE "CE" CON ATTACCO STANDARD RETRO CARTELLO IN FERRO O ALLUMINIO
C	040 - 005 040 - 010	STAFFA A PONTE Ø 60 ANTIROTAZIONE + STAFFA ARCATA PIATTA + GUIDATESTA PER VITE DA 8 - 10 + BULLONERIA 8x45 ZINCATA, PER SEGNALI "CE" CON ATTACCO OMEGA STANDARD IN FERRO O ALLUMINIO

CARATTERISTICHE TECNICHE MATERIALE RETRORIFLETTENTE DELLA FACCIA A VISTA EN 12899-1:2007

Tabella 1: Campioni serigrafati con inchiostro Sun Chemical serie ZPVC SIGN

Bianco serigrafato giallo
Bianco serigrafato rosso
Bianco serigrafato arancio
Bianco serigrafato verde
Bianco serigrafato blu
Bianco serigrafato marrone
Giallo serigrafato rosso

1.2.2 Risultati delle prove

Nella tabella 2 sono riportati i dati relativi alle coordinate cromatiche in condizioni diurne e al fattore di luminanza β e nella tabella 3 quelli relativi ai coefficienti di retroriflessione *RA* ottenuti dalle prove eseguite su campioni cui al punto 1.2.2.

Tabella 2: Risultati delle prove sui campioni serigrafati
Coordinate cromatiche in condizioni diurne e fattore di luminanza β

Colore	No campione	Fattore di luminanza β	Coordinate cromatiche	
			x	y
Bianco serigrafato giallo	22	0,35	0,5057	0,4761
	23	0,35	0,5060	0,4759
	24	0,35	0,5076	0,4752
Bianco serigrafato rosso	25	0,09	0,6396	0,3318
	26	0,09	0,6396	0,3309
	27	0,09	0,6402	0,3320
Bianco serigrafato arancio	34	0,21	0,5672	0,3954
	35	0,21	0,5672	0,3952
	36	0,21	0,5686	0,3952
Bianco serigrafato verde	28	0,10	0,1359	0,4717
	29	0,10	0,1347	0,4726
	30	0,10	0,1351	0,4722
Bianco serigrafato blu	31	0,04	0,1360	0,1172
	32	0,04	0,1385	0,1188
	33	0,04	0,1362	0,1176
Bianco serigrafato marrone	37	0,07	0,5345	0,4164
	38	0,07	0,5370	0,4155
	39	0,07	0,5344	0,4175
Giallo serigrafato rosso	46	0,09	0,6461	0,3348
	47	0,09	0,6433	0,3350
	48	0,09	0,6471	0,3343

Retro-Reflective Material for Use in Road Signs
KIWALITE High Intensity Grade
Series 22000 Retroreflective Material RA2

White 22013	CR2	Green 22073	CR1	Dark Green 22273	CR1
Red 22063	CR1	Yellow 22043	CR2	Brown 22193	CR2
Orange 22053	CR1	Blue 22063	CR2		

KIWALITE Engineering Grade
Series 2000 Retroreflective Material RA1

White 2013	CR2	Brown 2193	CR2	Green 2073	CR1
Red 2063	CR2	Yellow 2043	CR2	Black 2093	NA
Orange 2053	CR1	Blue 2083	CR2		

CARATTERISTICHE TECNICHE MATERIALE DEL SOSTEGNO EN 12899-1:2007

CE

1609

Arvedi Tubi Acciaio S.p.A. via Acquaviva 3, I-26100 Cremona

14

1608 CPR P129

EN 12899-1:2007

Support for incorporation into an assembly of fixed vertical, read traffic signs installed permanently for vehicular and pedestrian traffic users

Supporti per segnali stradali per la circolazione di veicoli e pedoni installati permanentemente

Material's properties *(proprietà del materiale)*	• welded steel structural hollow sections (EN 10219-1) *(profilati cavi di acciaio saldati)* • steel grade: S235JRH *(acciaio)*
Geometrical properties *(proprietà geometriche)*	60,3x2x7000 mm
Performance under impact *(prestazioni in caso di impatto)*	NPD
Durability *(durabilità)*	Corrosion resistance: steel, hot dip galvanized, SP1 *(resistenza alla corrosione: acciaio, zincato a caldo, SP1)*

Descrizione del prodotto

Norma di produzione	EN 10219-1 T<3 MM	Descrizione	TUBO ELETTROSALDATO ZINCATO
Dimensioni	CRP 48,3X2X3300 4000	Zincatura	EN 10240 zincato a caldo
Marca acciaio	S235JRH		

Analisi Chimica

	C	Mn	Si	P	S	Al	Cr	Ni	Mo	Cu	Sn	V	Nb	Ti	B	N
Min						0,020										
Max	0,210	1,500	0,600	0,050	0,050											0,011

Prove Meccaniche e Tecnologiche

R (Mpa)				REH (Mpa)				A(%)		Rs/R		Fm(N)	
>=	360	<=	510	>=	235			>=	24,0				

Tipo di prova	Norma di riferimento	Richiesto	Um	N.prove	Risultato
CND	EN ISO 10893-2		%	100	FAVOREVOLE